Sales Code: FW313M **Barcode:** 5056678478059 **Brand:** nuie Kitchens **Description:** nuie Chrome Mini Basket Strainer Basin Waste



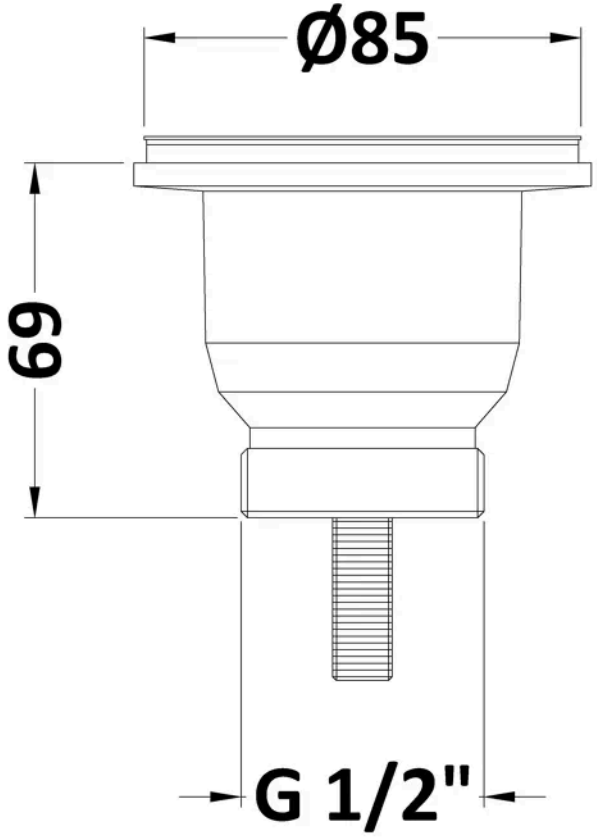

Product Dimensions

Product	69 x 85 x 85mm (H x W x D)
Packaged	100 x 122 x 122mm (H x W x D)
Nett Weight	0.28 kg
Packaged Weight	0.28 kg

Packaging Details

Box Qty	1
Label Size (mm)	50 x 100
Label Colour	White
Label Qty	1.0000

Product Details

Country of Origin	China
Product Material	Stainless Steel
Waste Type	Basket Strainer
Colour/Finish	Chrome
Style	Traditional
Waste Shape	Round

© ROXOR Group