Sales Code: FUZVA001 **Barcode:** 5056678403730 **Brand:** nuie **Description:** nuie Vault 400mm Gloss White Wall Hung Cloakroom Suite







Technical Drawing Not Available

Product Dimensions

Product	438 x 400 x 222mm (H x W x D)
Packaged	550 x 550 x 550mm (H x W x D)
Nett Weight	51.62 kg
Packaged Weight	52.12 kg

Packaging Details

Box Qty	3

Product Details

Country of Origin	China
Product Material	Brass,Urea,Vitreous China
Colour/Finish	Gloss White
Mount Type	Wall Hung
Style	Contemporary
Handle Type	Bar Handle
Construction Method	Cam & Wood Dowel
Bottle Trap Included	No
Cistern Fittings	Pre-Fitted 6/3L
Cistern Lever Type	Plastic Chrome Plated
Construction Type	Rigid
Fascia Finish	Mdf Painted Gloss
Flush Operating Type	Push Button
Handles Included	Yes
Includes Seat	Yes
Material Thickness	18 mm
Min Operating Pressure	0.2 Bar
No. Doors	1
No. Of Tapholes	1
Number Of Bowls	1
Overflow Included	Yes
Pan Trap Style	P-Trap
Pan Type	Open To Wall
Tap Included	Yes
Toilet Seat Function	Soft Close
Toilet Seat Hinge Type	Top Fix
Toilet Seat Type	Square
Waste Included	Yes

© ROXOR Group

Sales Code: NCG450 **Barcode:** 5056211807544 **Brand:** nuie **Description:** nuie Ava Close Coupled Toilet



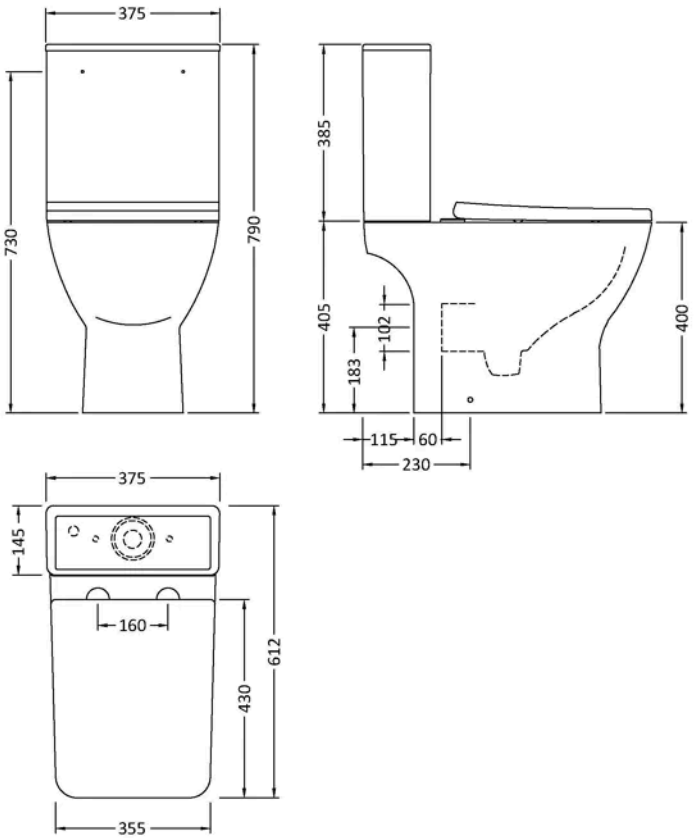

Product Dimensions

Product	790 x 375 x 612mm (H x W x D)
Packaged	430 x 770 x 420mm (H x W x D)
Nett Weight	38.5 kg
Packaged Weight	39 kg

Packaging Details

Box Qty	1

Product Details

Country of Origin	China
Product Material	Vitreous China
Colour/Finish	White
Style	Contemporary
Ce Certified	Yes
Includes Seat	Yes
Pan Type	Short Projection
Toilet Seat Function	Soft Close

© ROXOR Group

Sales Code: NVX182 **Barcode:** 5055369046546 **Brand:** nuie **Description:** nuie Vault Gloss White 400mm Wall Hung 1 Door Compact Vanity Unit With Ceramic Basin



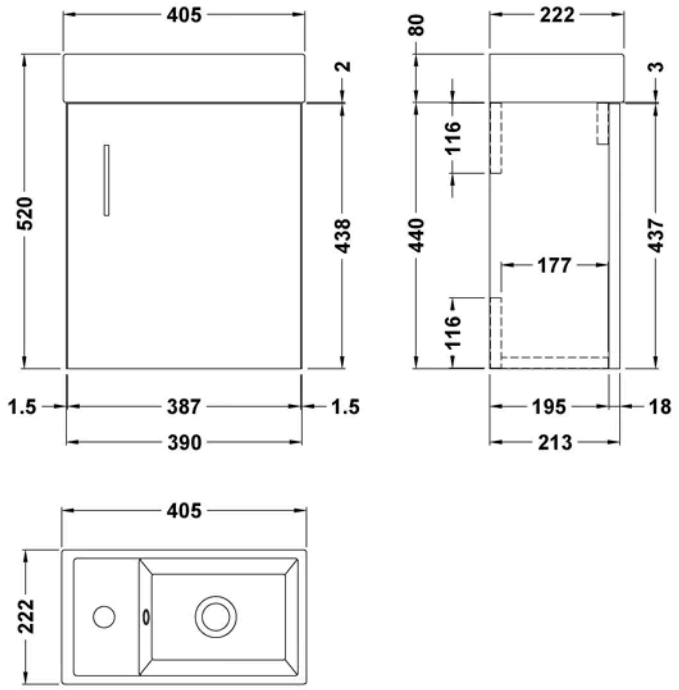

Product Dimensions

Product	520 x 405 x 222mm (H x W x D)
Packaged	465 x 245 x 410mm (H x W x D)
Nett Weight	12 kg
Packaged Weight	12.8 kg

Packaging Details

Box Qty	1

Product Details

Country of Origin	China
Product Material	Mfc Painted Gloss
Colour/Finish	Gloss White
Mount Type	Wall Hung
Style	Contemporary
Handle Type	Bar Handle
Construction Method	Cam & Wood Dowel
Ce Certified	No
Construction Type	Rigid
Fascia Finish	Mdf Painted Gloss
Fsc Certified	Yes
Handles Included	Yes
Inner Bowl Height	100 mm
Leg Set Included	No
Material Thickness	16 mm
No. Doors	1
No. Of Tapholes	1
No. Shelves	1
Number Of Bowls	1
Number Of Shelves	1
Overflow Included	Yes
Tap Included	No
Waste Included	No
Waste Shroud	No

© ROXOR Group

Sales Code: WIN315 **Barcode:** 5056211898191 **Brand:** nuie **Description:** nuie Windon Chrome Mini Mono Basin Mixer With Push Button Waste



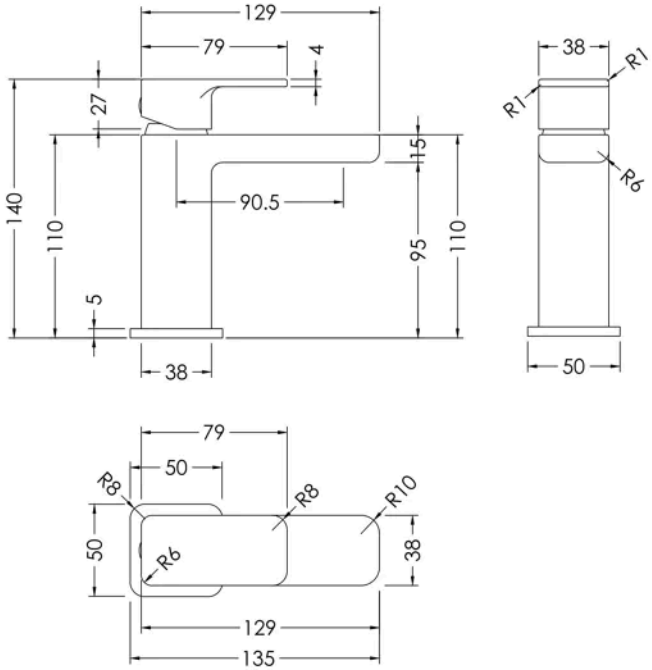

Product Dimensions

Product	140 x 48 x 129mm (H x W x D)
Packaged	95 x 225 x 275mm (H x W x D)
Outer Box	500 x 480 x 295mm (H x W x D)
Nett Weight	1.4 kg
Packaged Weight	1.62 kg

Packaging Details

Box Qty	1
Label Size (mm)	50 x 100
Label Colour	White
Label Qty	1.0000

Product Details

Country of Origin	China
Product Material	Brass,Plastic
Control Type	Manual
Waste Type	Push Button
WRAS Approved	No
Valve/Cartridge Type	Single Lever Cartridge
Colour/Finish	Chrome
Mount Type	Deck
Style	Contemporary
Handle Type	Lever/Square
TMV2 Approved	No
TMV3 Approved	No
Pipe Size	1/2"
Min Operating Pressure	0.2 Bar
Tap Spout Height	95 mm
Tap Spout Projection	90 mm
Tap Tails Included	Yes
Valve / Cartridge Type	Single Lever Cartridge
Waste Included	Yes

© ROXOR Group