Sales Code: FUZRC016 **Barcode:** 5056678404256 **Brand:** nuie **Description:** nuie Core 600mm Gloss White Floor Standing Cloakroom Suite



Technical Drawing Not Available

Product Dimensions

Product	814 x 579 x 342mm (H x W x D)
Packaged	550 x 550 x 550mm (H x W x D)
Nett Weight	63.75 kg
Packaged Weight	64.25 kg

Packaging Details

Box Qty	4

Product Details

Country of Origin	China
Product Material	Brass,Polypropylene,Vitreous China
Colour/Finish	Gloss White
Mount Type	Floor
Style	Contemporary
Handle Type	Knob
Fixings Included	Yes
Construction Method	Cam & Wood Dowel
Cistern Fittings	Pre-Fitted 6/3L
Cistern Lever Type	Plastic Chrome Plated
Construction Type	Rigid
Fascia Finish	Mdf Painted Gloss
Flush Operating Type	Push Button
Handles Included	Yes
Includes Seat	Yes
Inner Bowl Height	86 mm
Material Thickness	16 mm
Min Operating Pressure	0.2 Bar
No. Doors	2
No. Of Tapholes	1
No. Shelves	2
Number Of Bowls	1
Number Of Shelves	2
Overflow Cover Included	Yes
Overflow Included	Yes
Pan Trap Style	P-Trap
Tap Included	Yes
Template	Not Required
Toilet Seat Function	Soft Close
Toilet Seat Hinge Type	Top Fix
Toilet Seat Type	Round
Waste Included	Yes
Waste Shape	Round

© ROXOR Group

Sales Code: ARV305 **Barcode:** 5056211898474 **Brand:** nuie **Description:** nuie Arvan Chrome Mono Basin Mixer With Push Button Waste



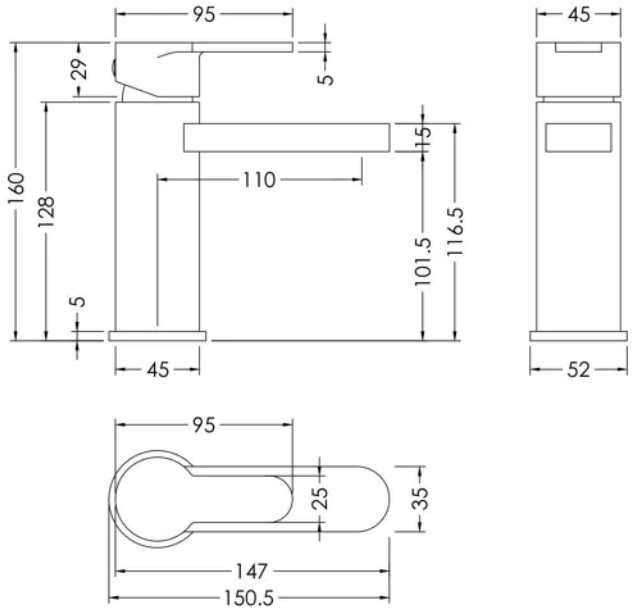

Product Dimensions

Product	160 x 52 x 147mm (H x W x D)
Packaged	95 x 240 x 285mm (H x W x D)
Outer Box	500 x 500 x 300mm (H x W x D)
Nett Weight	1.4 kg
Packaged Weight	1.6 kg

Packaging Details

Box Qty	1
Label Size (mm)	50 x 100
Label Colour	White
Label Qty	1.0000

Product Details

Country of Origin	China
Product Material	Brass,Plastic
Control Type	Manual
Waste Type	Push Button
WRAS Approved	Yes
Valve/Cartridge Type	Single Lever Cartridge
Colour/Finish	Chrome
Mount Type	Deck
Style	Contemporary
Handle Type	Lever/Round
TMV2 Approved	No
TMV3 Approved	No
Pipe Size	1/2"
Min Operating Pressure	0.2 Bar
Tap Spout Height	102 mm
Tap Spout Projection	110 mm
Tap Tails Included	Yes
Valve / Cartridge Type	Single Lever Cartridge
Waste Included	Yes
Wras Approval No	2204060

© ROXOR Group

Sales Code: NCG350 **Barcode:** 5056211868255 **Brand:** nuie **Description:** nuie Freya Close Coupled Toilet



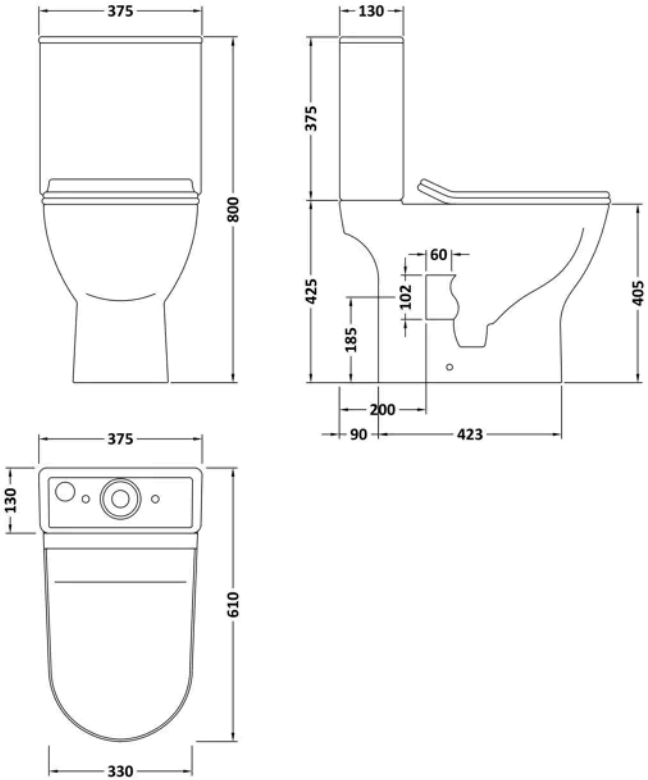

Product Dimensions

Product	800 x 375 x 610mm (H x W x D)
Packaged	435 x 770 x 420mm (H x W x D)
Nett Weight	33 kg
Packaged Weight	34 kg

Packaging Details

Box Qty	1

Product Details

Country of Origin	China
Product Material	Vitreous China
Colour/Finish	White
Style	Contemporary
Ce Certified	Yes
Includes Seat	Yes
Pan Type	Short Projection

© ROXOR Group

Sales Code: RC004 **Barcode:** 5056211853404 **Brand:** nuie **Description:** nuie Core 600mm 1 Tap Hole Ceramic Thin Edge Basin



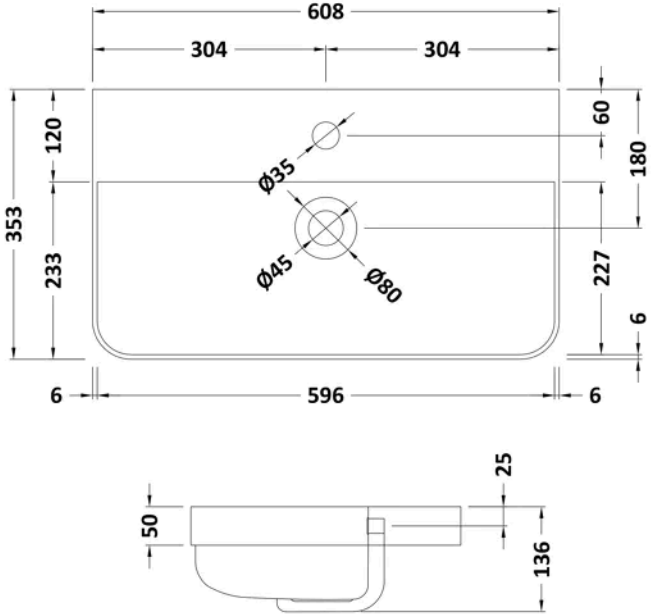

Product Dimensions

Product	135 x 605 x 355mm (H x W x D)
Packaged	415 x 640 x 210mm (H x W x D)
Nett Weight	10 kg
Packaged Weight	10.5 kg

Packaging Details

Box Qty	1

Product Details

Country of Origin	China
Product Material	Vitreous China
Colour/Finish	White
Ce Certified	Yes
Inner Bowl Height	86 mm
No. Of Tapholes	1
Number Of Bowls	1

© ROXOR Group

Sales Code: RC0104 **Barcode:** 5056211853367 **Brand:** nuie **Description:** nuie core 600mm Gloss White 2 Door Floor Standing Vanity Unit



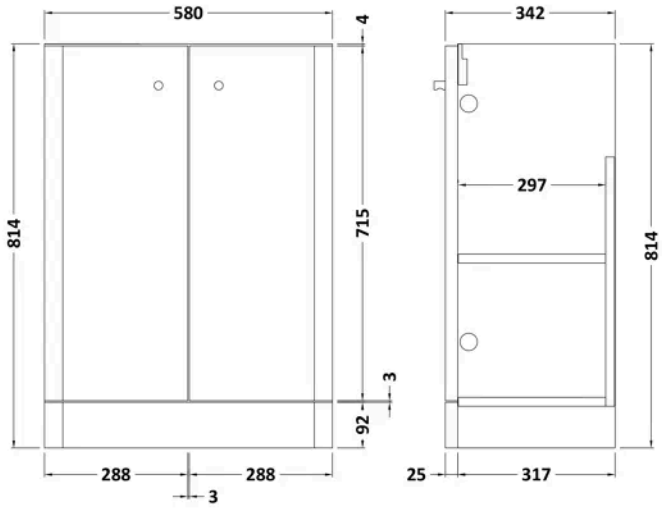

Product Dimensions

Product	814 x 580 x 342mm (H x W x D)
Packaged	835 x 500 x 340mm (H x W x D)
Nett Weight	19.5 kg
Packaged Weight	20 kg

Packaging Details

Box Qty	1

Product Details

Country of Origin	China
Product Material	Mdf Painted Gloss
Colour/Finish	Gloss White
Mount Type	Floor
Style	Contemporary
Construction Method	Cam & Wood Dowel
Construction Type	Rigid
Fascia Finish	Mdf Painted Gloss
Handles Included	Yes
Material Thickness	18 mm
No. Doors	2
No. Shelves	1
Number Of Shelves	1

© ROXOR Group