Sales Code: FUZRC001 **Barcode:** 5056678404102 **Brand:** nuie **Description:** nuie Core 400mm Gloss White Wall Hung Cloakroom Suite



Technical Drawing Not Available

Product Dimensions

Product	540 x 379 x 342 x 379mm (H x W x D x L)
Packaged	550 x 550 x 550mm (H x W x D)
Nett Weight	57.25 kg
Packaged Weight	57.75 kg

Packaging Details

Box Qty	4

Product Details

Country of Origin	China
Product Material	Polypropylene,Vitreous China
Colour/Finish	Gloss White
Mount Type	Floor,Wall Hung
Style	Contemporary
Construction Method	Cam & Wood Dowel
Construction Type	Rigid
Fascia Finish	Mdf Painted Gloss
Handles Included	Yes
Includes Seat	Yes
Material Thickness	16 mm
Min Operating Pressure	0.2 Bar
No. Doors	1
No. Of Tapholes	1
Number Of Bowls	1
Overflow Included	Yes
Pan Trap Style	P-Trap
Tap Included	Yes
Toilet Seat Function	Soft Close
Toilet Seat Hinge Type	Top Fix
Waste Included	Yes

© ROXOR Group

Sales Code: ARV305 **Barcode:** 5056211898474 **Brand:** nuie **Description:** nuie Arvan Chrome Mono Basin Mixer With Push Button Waste



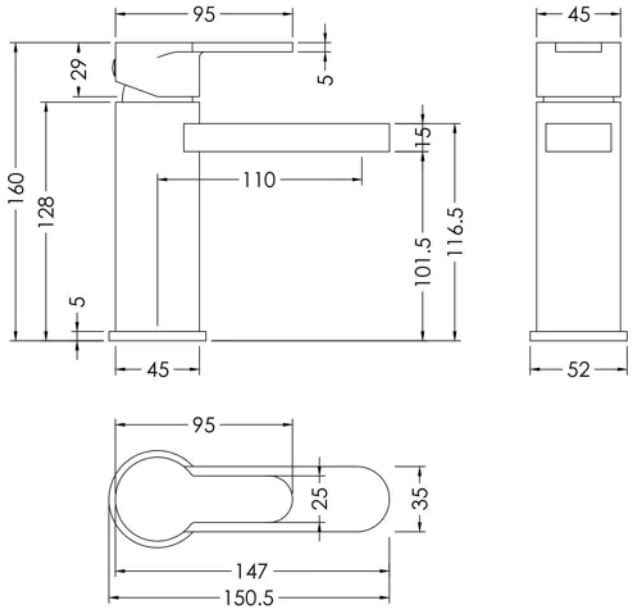

Product Dimensions

Product	160 x 52 x 147mm (H x W x D)
Packaged	95 x 240 x 285mm (H x W x D)
Outer Box	500 x 500 x 300mm (H x W x D)
Nett Weight	1.4 kg
Packaged Weight	1.6 kg

Packaging Details

Box Qty	1
Label Size (mm)	50 x 100
Label Colour	White
Label Qty	1.0000

Product Details

Country of Origin	China
Product Material	Brass,Plastic
Control Type	Manual
Waste Type	Push Button
WRAS Approved	Yes
Valve/Cartridge Type	Single Lever Cartridge
Colour/Finish	Chrome
Mount Type	Deck
Style	Contemporary
Handle Type	Lever/Round
TMV2 Approved	No
TMV3 Approved	No
Pipe Size	1/2"
Min Operating Pressure	0.2 Bar
Tap Spout Height	102 mm
Tap Spout Projection	110 mm
Tap Tails Included	Yes
Valve / Cartridge Type	Single Lever Cartridge
Waste Included	Yes
Wras Approval No	2204060

© ROXOR Group

Sales Code: NCG350 **Barcode:** 5056211868255 **Brand:** nuie **Description:** nuie Freya Close Coupled Toilet



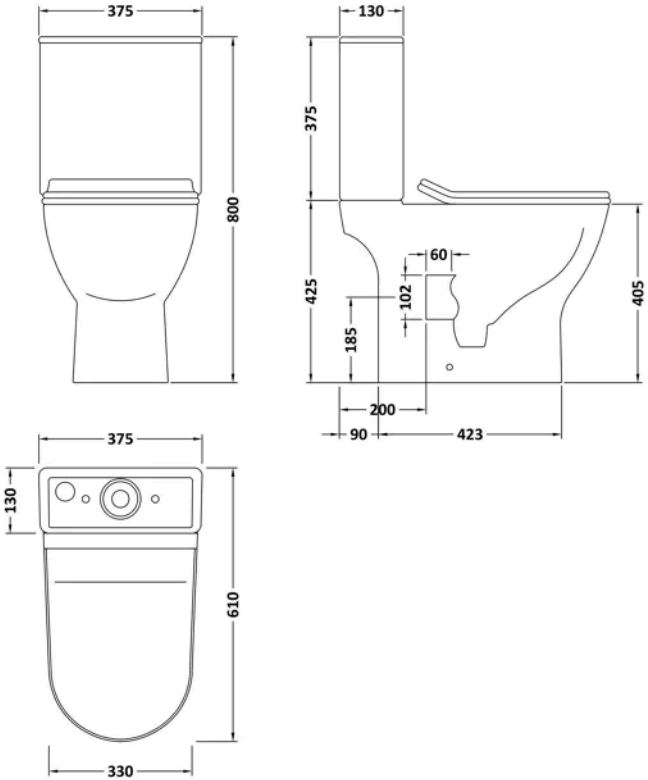

Product Dimensions

Product	800 x 375 x 610mm (H x W x D)
Packaged	435 x 770 x 420mm (H x W x D)
Nett Weight	33 kg
Packaged Weight	34 kg

Packaging Details

Box Qty	1

Product Details

Country of Origin	China
Product Material	Vitreous China
Colour/Finish	White
Style	Contemporary
Ce Certified	Yes
Includes Seat	Yes
Pan Type	Short Projection

© ROXOR Group

Sales Code: RC002 **Barcode:** 5056211853381 **Brand:** nuie **Description:** nuie Core 400mm 1 Tap Hole Ceramic Thin Edge Basin



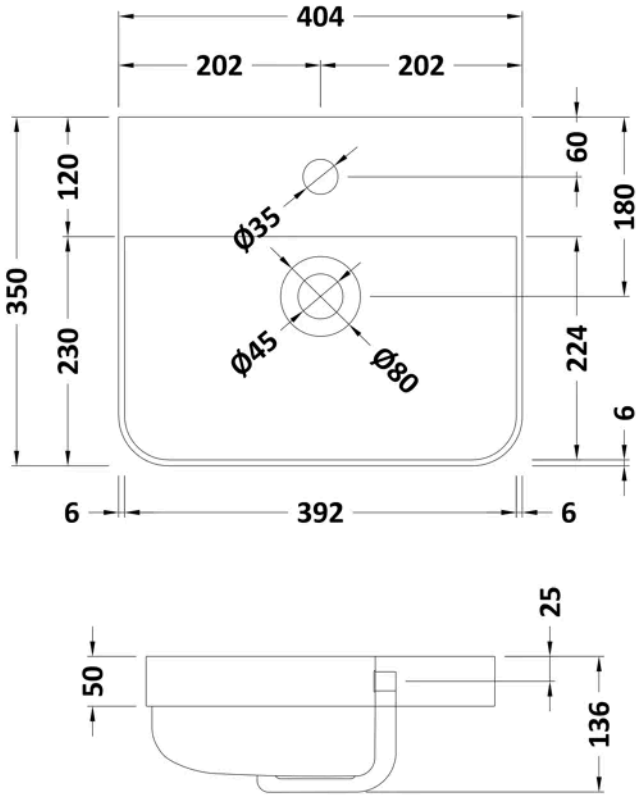

Product Dimensions

Product	135 x 405 x 355mm (H x W x D)
Packaged	415 x 440 x 210mm (H x W x D)
Nett Weight	9.5 kg
Packaged Weight	10 kg

Packaging Details

Box Qty	1

Product Details

Country of Origin	China
Product Material	Vitreous China
Colour/Finish	White
Ce Certified	Yes
Inner Bowl Height	86 mm
No. Of Tapholes	1
Number Of Bowls	1

© ROXOR Group

Sales Code: RC0152 **Barcode:** 5056211853336 **Brand:** nuie **Description:** nuie core 400mm Gloss White 1-Door Wall Hung Vanity Unit



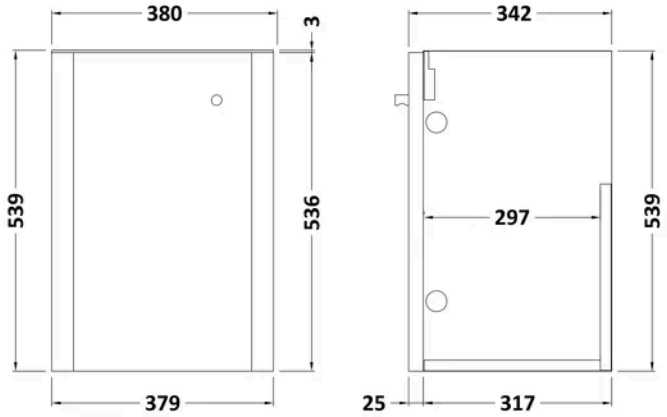

Product Dimensions

Product	539 x 379 x 342mm (H x W x D)
Packaged	560 x 400 x 340mm (H x W x D)
Nett Weight	13.5 kg
Packaged Weight	14 kg

Packaging Details

Box Qty	1

Product Details

Country of Origin	China
Product Material	Mdf Painted Gloss
Colour/Finish	Gloss White
Mount Type	Wall Hung
Style	Contemporary
Construction Method	Cam & Wood Dowel
Construction Type	Rigid
Fascia Finish	Mdf Painted Gloss
Handles Included	Yes
Material Thickness	18 mm

© ROXOR Group