Sales Code: FUZME008 **Barcode:** 5056678403938 **Brand:** nuie **Description:** nuie Merit 500mm Midnight Blue Wall Hung Cloakroom Suite



Technical Drawing Not Available

Product Dimensions

Packaged	550 x 550 x 550mm (H x W x D)
Nett Weight	64.08 kg
Packaged Weight	64.58 kg

Packaging Details

Box Qty	4

Product Details

Country of Origin	China
Product Material	Urea
Colour/Finish	Midnight Blue
Mount Type	Floor,Wall Hung
Style	Contemporary
Construction Method	Cam & Wood Dowel
Cistern Fittings	Pre-Fitted 6/3L
Cistern Lever Type	Plastic Chrome Plated
Construction Type	Rigid
Fascia Finish	Mfc Smooth Matt
Flush Operating Type	Push Button
Handles Included	No
Includes Seat	Yes
Material Thickness	18 mm
Min Operating Pressure	0.2 Bar
No. Doors	1
No. Of Tapholes	1
Number Of Bowls	1
Overflow Cover Included	No
Overflow Included	No
Pan Trap Style	P-Trap
Pan Type	Open To Wall
Tap Included	Yes
Toilet Seat Function	Soft Close
Toilet Seat Hinge Type	Top Fix
Toilet Seat Type	Square
Waste Included	Yes

© ROXOR Group

Sales Code: MOZ2982 **Barcode:** 5056678447369 **Brand:** nuie **Description:** nuie Merit 500mm 1-Door Vanity Unit

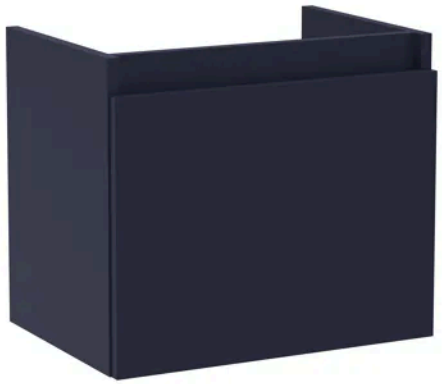

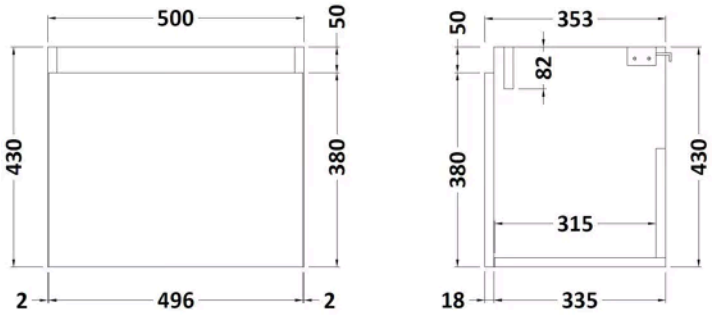

Product Dimensions

Product	430 x 500 x 353mm (H x W x D)
Packaged	450 x 520 x 375mm (H x W x D)
Nett Weight	12.5 kg
Packaged Weight	13 kg

Packaging Details

Box Qty	1

Product Details

Country of Origin	China
Product Material	Mfc Smooth Matt
Colour/Finish	Midnight Blue
Mount Type	Wall Hung
Style	Contemporary
Construction Method	Cam & Wood Dowel
Construction Type	Rigid
Fascia Finish	Mfc Smooth Matt
Handles Included	No
Material Thickness	18 mm
No. Drawers	1

© ROXOR Group

Sales Code: NCG450 **Barcode:** 5056211807544 **Brand:** nuie **Description:** nuie Ava Close Coupled Toilet



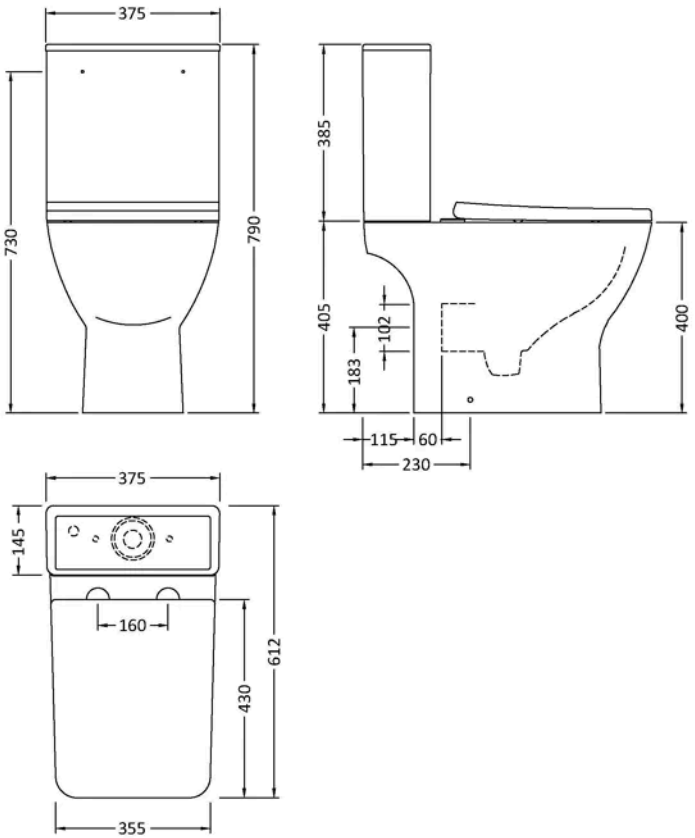

Product Dimensions

Product	790 x 375 x 612mm (H x W x D)
Packaged	430 x 770 x 420mm (H x W x D)
Nett Weight	38.5 kg
Packaged Weight	39 kg

Packaging Details

Box Qty	1

Product Details

Country of Origin	China
Product Material	Vitreous China
Colour/Finish	White
Style	Contemporary
Ce Certified	Yes
Includes Seat	Yes
Pan Type	Short Projection
Toilet Seat Function	Soft Close

© ROXOR Group

Sales Code: PMB022 **Barcode:** 5055275819524 **Brand:** nuie **Description:** nuie 1 Tap Hole 503mm Polymarble L-Shaped Basin



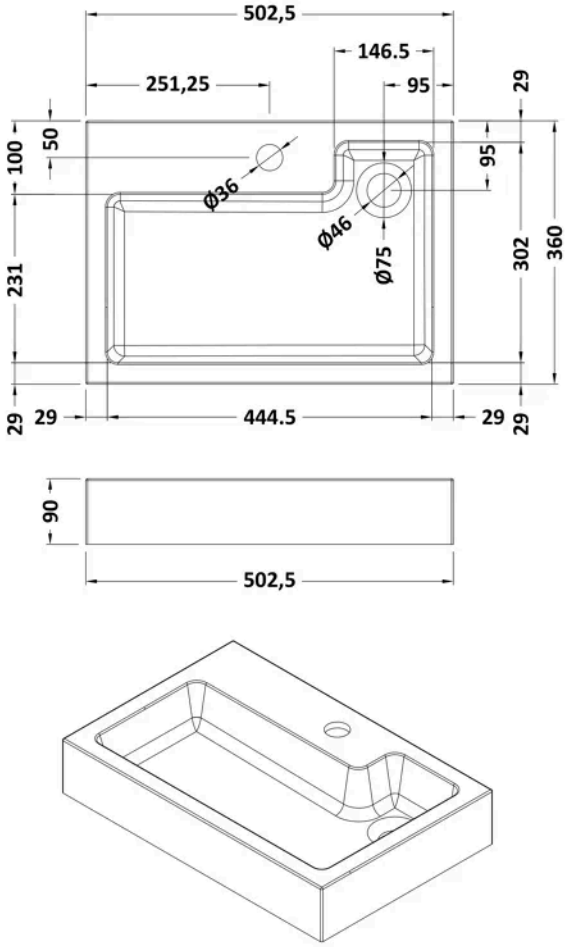

Product Dimensions

Packaged	110 x 525 x 380mm (H x W x D)
Nett Weight	11.5 kg
Packaged Weight	12 kg

Packaging Details

Box Qty	1

Product Details

Country of Origin	China
Product Material	Polymarble
Colour/Finish	White
Style	Contemporary
Ce Certified	Yes
Inner Bowl Height	70 mm
No. Of Tapholes	1
Number Of Bowls	1
Overflow Included	No
Tap Included	No
Waste Included	No

© ROXOR Group

Sales Code: WIN305 **Barcode:** 5056211898184 **Brand:** nuie **Description:** nuie Windon Chrome Mono Basin Mixer With Push Button Waste



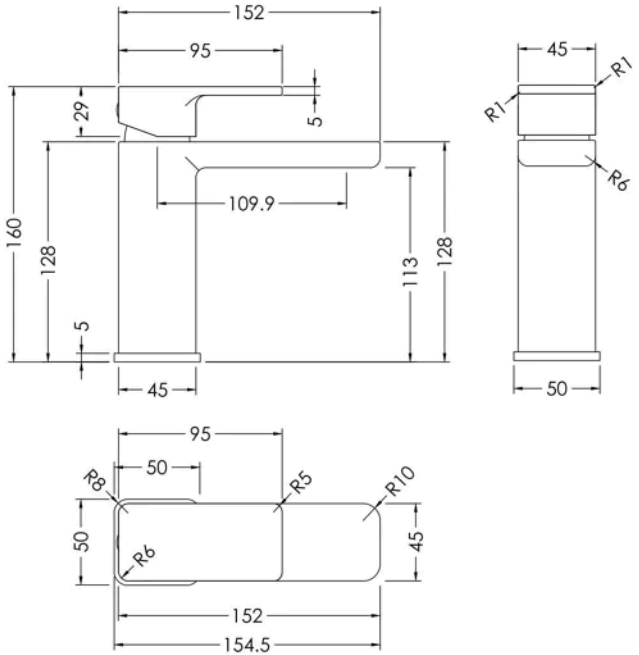

Product Dimensions

Product	160 x 50 x 155mm (H x W x D)
Packaged	95 x 240 x 285mm (H x W x D)
Outer Box	500 x 500 x 300mm (H x W x D)
Nett Weight	2.38 kg
Packaged Weight	2.63 kg

Packaging Details

Box Qty	1
Label Size (mm)	50 x 100
Label Colour	White
Label Qty	1.0000

Product Details

Country of Origin	China
Product Material	Brass,Plastic
Control Type	Manual
Waste Type	Push Button
WRAS Approved	Yes
Valve/Cartridge Type	Single Lever Cartridge
Colour/Finish	Chrome
Mount Type	Deck
Style	Contemporary
Handle Type	Lever/Square
TMV2 Approved	No
TMV3 Approved	No
Pipe Size	1/2"
Min Operating Pressure	0.2 Bar
Tap Spout Height	113 mm
Tap Spout Projection	110 mm
Tap Tails Included	Yes
Valve / Cartridge Type	Single Lever Cartridge
Waste Included	Yes
Wras Approval No	2204060

© ROXOR Group