Sales Code: FUZMA004 **Barcode:** 5056678404072 **Brand:** nuie **Description:** nuie Mayford 480mm Floor Standing Compact Cloakroom Suite



Technical Drawing Not Available

Product Dimensions

Product	670 x 475 x 230 x 475mm (H x W x D x L)
Packaged	550 x 550 x 550mm (H x W x D)
Nett Weight	56.63 kg
Packaged Weight	57.13 kg

Packaging Details

Box Qty	3

Product Details

Country of Origin	China
Product Material	Polypropylene,Vitreous China
Colour/Finish	Gloss White
Mount Type	Floor
Style	Contemporary
Handle Type	Bar Handle
Construction Method	Cam & Wood Dowel
Bottle Trap Included	No
Cistern Fittings	Loose 6/3L
Cistern Lever Type	Plastic Chrome Plated
Construction Type	Rigid
Fascia Finish	Mdf Painted Gloss
Flush Operating Type	Push Button
Handles Included	Yes
Includes Seat	Yes
Inner Bowl Height	100 mm
Material Thickness	16 mm
No. Doors	1
No. Of Tapholes	1
No. Shelves	1
Number Of Bowls	1
Number Of Shelves	1
Overflow Cover Included	No
Overflow Included	Yes
Pan Trap Style	P-Trap
Pan Type	Open To Wall
Tap Included	No
Toilet Seat Function	Soft Close
Toilet Seat Hinge Type	Bottom & Top Fix
Toilet Seat Type	Round
Waste Included	No

© ROXOR Group

Sales Code: NBV001 **Barcode:** 5055146194033 **Brand:** nuie **Description:** nuie Mayford 1 Tap Hole 480mm Ceramic Compact Vessel Basin



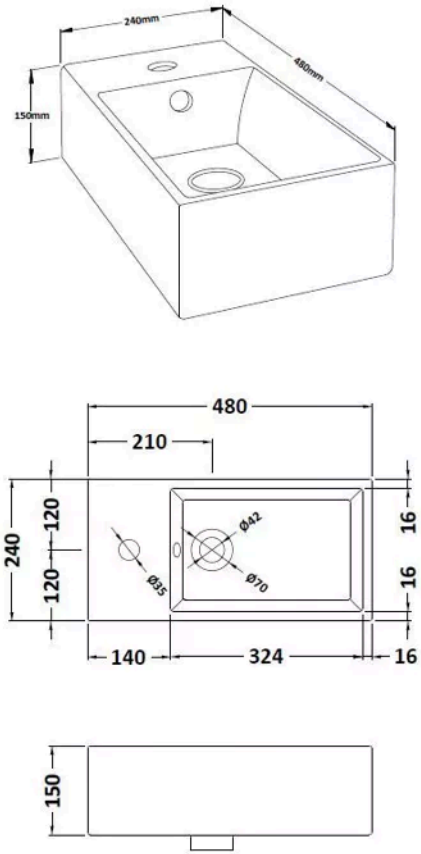

Product Dimensions

Product	240 x 480 x 140mm (H x W x D)
Packaged	270 x 470 x 180mm (H x W x D)
Nett Weight	10.5 kg
Packaged Weight	11.5 kg

Packaging Details

Box Qty	1

Product Details

Country of Origin	China
Product Material	Vitreous China
Colour/Finish	White
Ce Certified	Yes
Inner Bowl Height	100 mm
No. Of Tapholes	1
Number Of Bowls	1

© ROXOR Group

Sales Code: NCS250 **Barcode:** 5060272822774 **Brand:** nuie **Description:** nuie Ivo Rimless Close Coupled Toilet



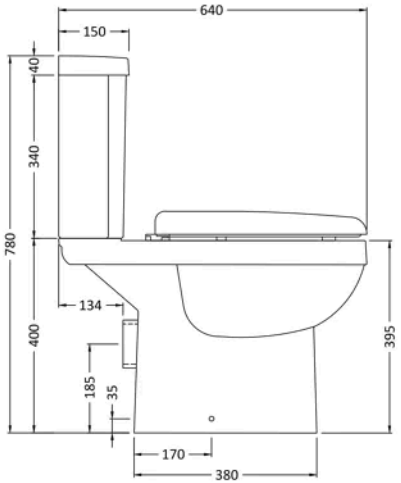



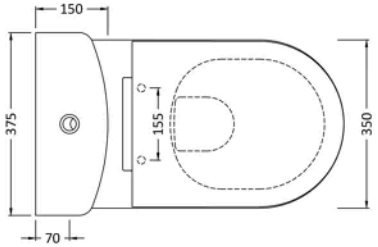

Product Dimensions

Product	780 x 375 x 640mm (H x W x D)
Packaged	445 x 390 x 725mm (H x W x D)
Nett Weight	33.35 kg
Packaged Weight	33.85 kg

Packaging Details

Box Qty	1

Product Details

Country of Origin	China
Product Material	Vitreous China
Colour/Finish	White
Style	Contemporary
Ce Certified	Yes
Cistern Fittings	Loose 6/3L
Cistern Lever Type	Plastic Chrome Plated
Flush Operating Type	Push Button
Includes Seat	Yes
Pan Trap Style	P-Trap
Pan Type	Open To Wall
Toilet Seat Function	Soft Close
Toilet Seat Hinge Material	Plastic
Toilet Seat Hinge Type	Bottom & Top Fix
Toilet Seat Type	Round

© ROXOR Group

Sales Code: NVX102 **Barcode:** 5055146195580 **Brand:** nuie **Description:** nuie Mayford 450mm Gloss White 1 Door Vanity Unit



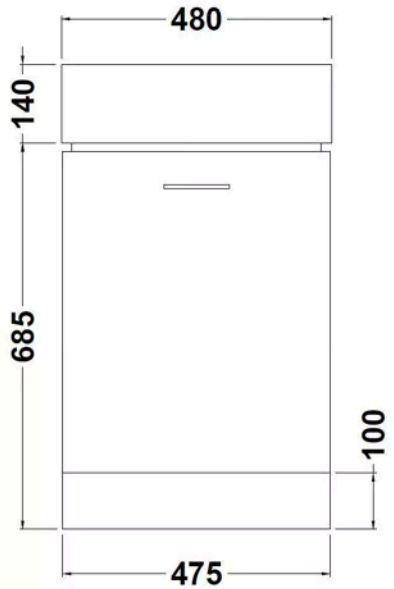

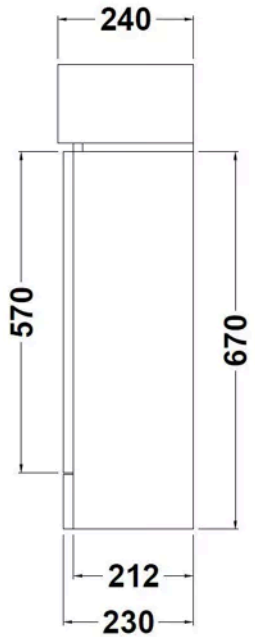

Product Dimensions

Product	685 x 475 x 230mm (H x W x D)
Packaged	255 x 500 x 720mm (H x W x D)
Nett Weight	13.28 kg
Packaged Weight	14.54 kg

Packaging Details

Box Qty	1

Product Details

Country of Origin	China
Product Material	Mdf Painted Matt
Colour/Finish	Gloss White
Mount Type	Wall Hung
Style	Contemporary
Construction Method	Cam & Wood Dowel
Construction Type	Rigid
Fascia Finish	Mdf Painted Matt
Handles Included	Yes
Material Thickness	18 mm
No. Doors	1
No. Shelves	1
Number Of Shelves	1

© ROXOR Group