Sales Code: FUZMA003 **Barcode:** 5056678404065 **Brand:** nuie **Description:** nuie Mayford 420mm Floor Standing Compact Cloakroom Suite



Technical Drawing Not Available

Product Dimensions

Product	780 x 400 x 200mm (H x W x D)
Packaged	550 x 550 x 550mm (H x W x D)
Nett Weight	49.55 kg
Packaged Weight	50.05 kg

Packaging Details

Box Qty	2

Product Details

Country of Origin	China
Product Material	Polypropylene,Vitreous China
Colour/Finish	Gloss White
Mount Type	Floor
Style	Contemporary
Handle Type	Bar Handle
Fixings Included	No
Construction Method	Cam & Wood Dowel
Bottle Trap Included	No
Cistern Fittings	Loose 6/3L
Cistern Lever Type	Plastic Chrome Plated
Construction Type	Rigid
Extras Included	Shelves
Fascia Finish	Mdf Painted Gloss
Flush Operating Type	Push Button
Handles Included	Yes
Includes Seat	Yes
Material Thickness	16 mm
No. Doors	1
No. Of Tapholes	1
No. Shelves	1
Number Of Bowls	1
Number Of Shelves	1
Overflow Included	Yes
Pan Trap Style	P-Trap
Pan Type	Open To Wall
Tap Included	No
Toilet Seat Function	Soft Close
Toilet Seat Hinge Type	Bottom & Top Fix
Toilet Seat Type	Round
Waste Included	No

© ROXOR Group

Sales Code: NCS250 **Barcode:** 5060272822774 **Brand:** nuie **Description:** nuie Ivo Rimless Close Coupled Toilet



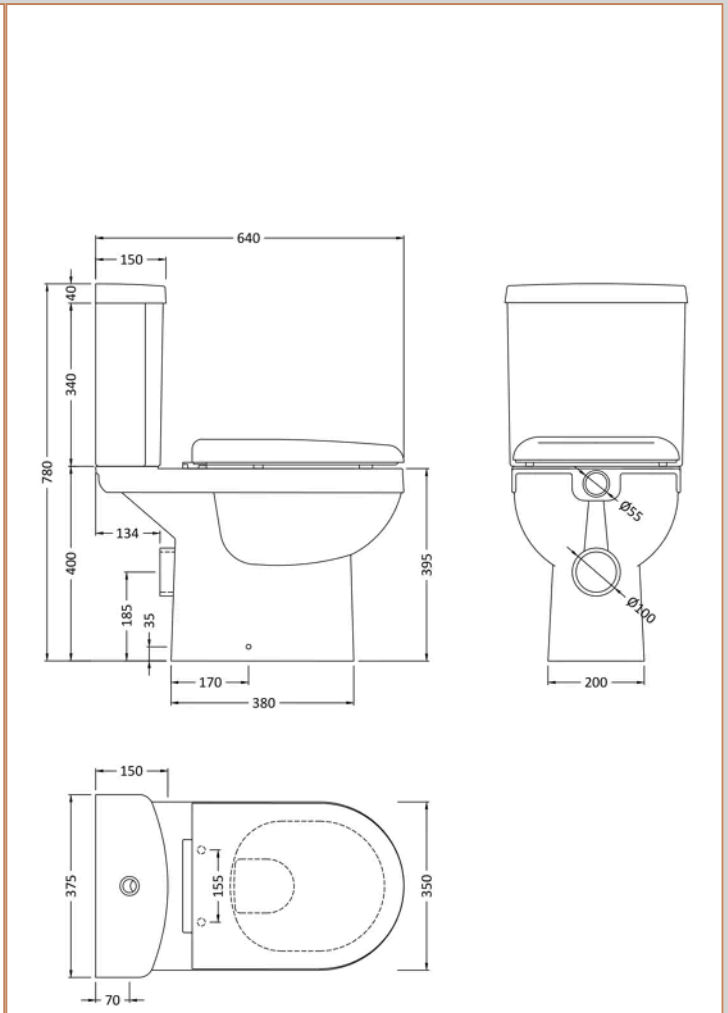

Product Dimensions

Product	780 x 375 x 640mm (H x W x D)
Packaged	445 x 390 x 725mm (H x W x D)
Nett Weight	33.35 kg
Packaged Weight	33.85 kg

Packaging Details

Box Qty	1

Product Details

Country of Origin	China
Product Material	Vitreous China
Colour/Finish	White
Style	Contemporary
Ce Certified	Yes
Cistern Fittings	Loose 6/3L
Cistern Lever Type	Plastic Chrome Plated
Flush Operating Type	Push Button
Includes Seat	Yes
Pan Trap Style	P-Trap
Pan Type	Open To Wall
Toilet Seat Function	Soft Close
Toilet Seat Hinge Material	Plastic
Toilet Seat Hinge Type	Bottom & Top Fix
Toilet Seat Type	Round

© ROXOR Group

Sales Code: NVS100

Barcode: 5055369001880

Brand: nuie

Description: nuie Mayford 400mm Gloss White Floor Standing 1 Door Cloakroom Vanity Unit With Ceramic Basin



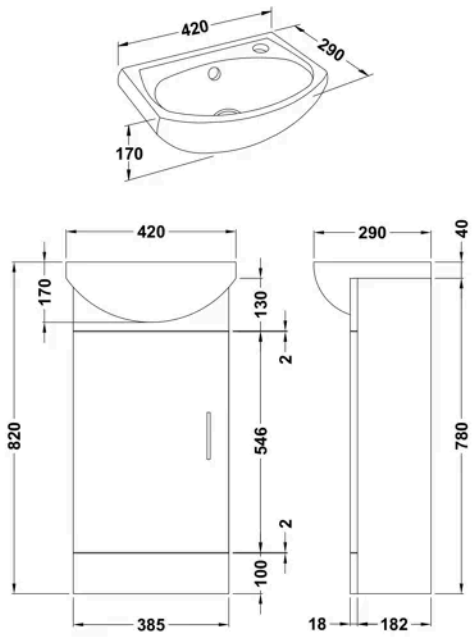

Product Dimensions

Product	780 x 400 x 200mm (H x W x D)
Packaged	810 x 230 x 400mm (H x W x D)
Nett Weight	16.7 kg
Packaged Weight	17.8 kg

Packaging Details

Box Qty	1

Product Details

Country of Origin	China
Product Material	Mfc Painted Gloss
Colour/Finish	White
Mount Type	Floor
Style	Contemporary
Handle Type	Bar Handle
Construction Method	Cam & Wood Dowel
Ce Certified	No
Construction Type	Rigid
Fascia Finish	Mdf Painted Gloss
Fsc Certified	Yes
Handles Included	Yes
Inner Bowl Height	100 mm
Leg Set Included	No
Material Thickness	16 mm
No. Doors	1
No. Of Tapholes	1
No. Shelves	1
Number Of Bowls	1
Number Of Shelves	1
Overflow Included	Yes
Tap Included	No
Waste Included	No
Waste Shroud	No

© ROXOR Group