Sales Code: FUZMA001 **Barcode:** 5056678404041 **Brand:** nuie **Description:** nuie Mayford Floor Standing Corner Cloakroom Suite



Technical Drawing Not Available

Product Dimensions

Product	800 x 367 x 367mm (H x W x D)
Packaged	550 x 550 x 550mm (H x W x D)
Nett Weight	55.11 kg
Packaged Weight	55.61 kg

Packaging Details

Box Qty	2

Product Details

Country of Origin	China
Product Material	Polypropylene,Vitreous China
Colour/Finish	Gloss White
Mount Type	Floor
Style	Contemporary
Handle Type	D Shape
Fixings Included	Yes
Construction Method	Cam & Wood Dowel
Cistern Fittings	Loose 6/3L
Cistern Lever Type	Plastic Chrome Plated
Construction Type	Rigid
Fascia Finish	Mdf Painted Gloss
Flush Operating Type	Push Button
Handles Included	Yes
Includes Seat	Yes
Material Thickness	16 mm
No. Doors	2
No. Of Tapholes	1
No. Shelves	1
Number Of Bowls	1
Number Of Shelves	1
Pan Trap Style	P-Trap
Pan Type	Open To Wall
Tap Included	No
Toilet Seat Function	Soft Close
Toilet Seat Hinge Material	Polypropylene
Toilet Seat Hinge Type	Bottom & Top Fix
Toilet Seat Type	Round
Waste Included	No
Waste Shape	Round

© ROXOR Group

Sales Code: NCS250 **Barcode:** 5060272822774 **Brand:** nuie **Description:** nuie Ivo Rimless Close Coupled Toilet



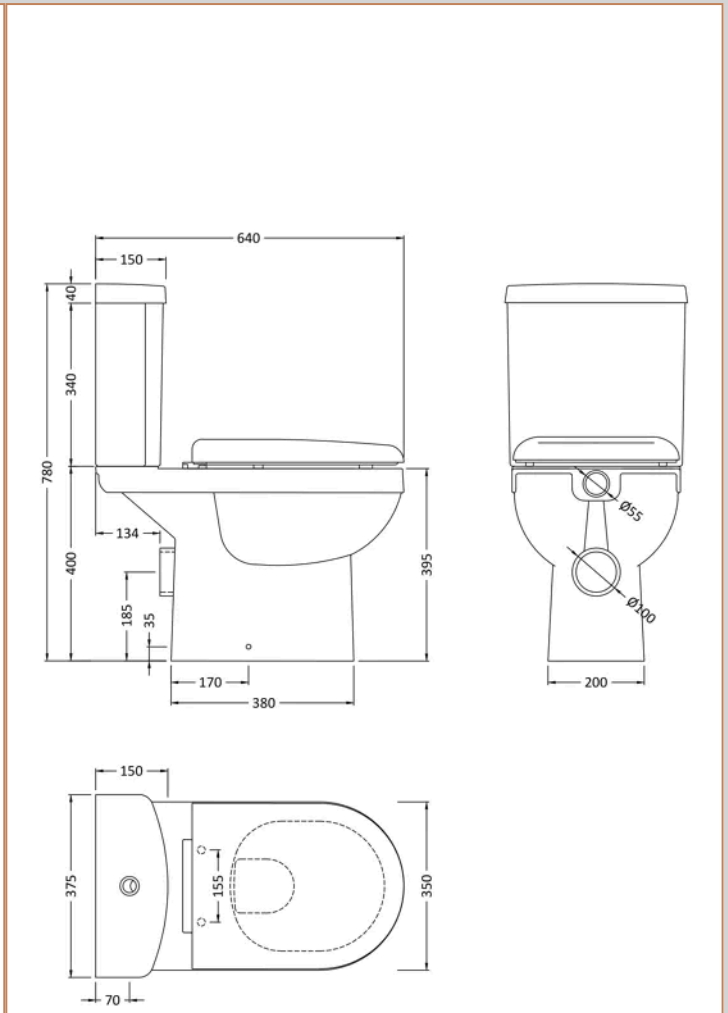

Product Dimensions

Product	780 x 375 x 640mm (H x W x D)
Packaged	445 x 390 x 725mm (H x W x D)
Nett Weight	33.35 kg
Packaged Weight	33.85 kg

Packaging Details

Box Qty	1

Product Details

Country of Origin	China
Product Material	Vitreous China
Colour/Finish	White
Style	Contemporary
Ce Certified	Yes
Cistern Fittings	Loose 6/3L
Cistern Lever Type	Plastic Chrome Plated
Flush Operating Type	Push Button
Includes Seat	Yes
Pan Trap Style	P-Trap
Pan Type	Open To Wall
Toilet Seat Function	Soft Close
Toilet Seat Hinge Material	Plastic
Toilet Seat Hinge Type	Bottom & Top Fix
Toilet Seat Type	Round

© ROXOR Group

Sales Code: NVC180A

Barcode: 5060272823320

Brand: nuie

Description: nuie Mayford 800mm Gloss White Floor Standing 2 Door Corner Vanity Unit With Ceramic Basin



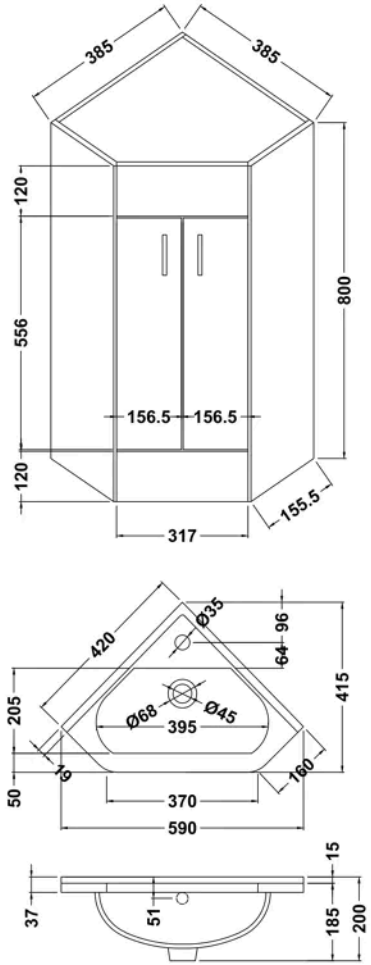

Product Dimensions

Product	837 x 590 x 415mm (H x W x D)
Packaged	840 x 410 x 560mm (H x W x D)
Nett Weight	22.26 kg
Packaged Weight	23.76 kg

Packaging Details

Box Qty	1

Product Details

Country of Origin	China
Product Material	Mfc Painted Gloss
Colour/Finish	Gloss White
Mount Type	Floor
Style	Contemporary
Handle Type	D Shape
Construction Method	Cam & Wood Dowel
Ce Certified	No
Construction Type	Rigid
Fascia Finish	Mdf Painted Gloss
Handles Included	Yes
Inner Bowl Height	100 mm
Leg Set Included	No
Material Thickness	16 mm
No. Doors	2
No. Of Tapholes	1
No. Shelves	1
Number Of Bowls	1
Number Of Shelves	1
Overflow Included	Yes
Tap Included	No
Waste Included	No
Waste Shroud	No

© ROXOR Group