Sales Code: FUZDE008 **Barcode:** 5056678405260 **Brand:** nuie **Description:** nuie Deco 400mm Soft Black Floor Standing Cloakroom Suite



Technical Drawing Not Available

Product Dimensions

Product	781 x 400 x 222mm (H x W x D)
Packaged	550 x 550 x 550mm (H x W x D)
Nett Weight	61.6 kg
Packaged Weight	62.1 kg

Packaging Details

Box Qty	7

Product Details

Country of Origin	China
Product Material	Brass,Polypropylene
Colour/Finish	Soft Black
Mount Type	Floor
Style	Contemporary
Handle Type	Finger Pull
Fixings Included	No
Construction Method	Cam & Wood Dowel
Construction Type	Rigid
Fascia Finish	Mdf Painted Matt
Flush Operating Type	Push Button
Handles Included	Yes
Includes Seat	Yes
Material Thickness	16 mm
Min Operating Pressure	0.2 Bar
No. Doors	1
No. Of Tapholes	1
No. Shelves	1
Number Of Bowls	1
Number Of Shelves	1
Overflow Cover Included	Yes
Overflow Included	Yes
Pan Trap Style	P-Trap
Pan Type	Back To Wall
Tap Included	Yes
Toilet Seat Function	Soft Close
Toilet Seat Hinge Type	Top Fix
Toilet Seat Type	Square
Waste Included	Yes

© ROXOR Group

Sales Code: FLT1420 **Barcode:** 5056462639550 **Brand:** nuie **Description:** nuie Deco Compact Soft Black 400mm Floor Standing Vanity Unit With Ceramic Basin



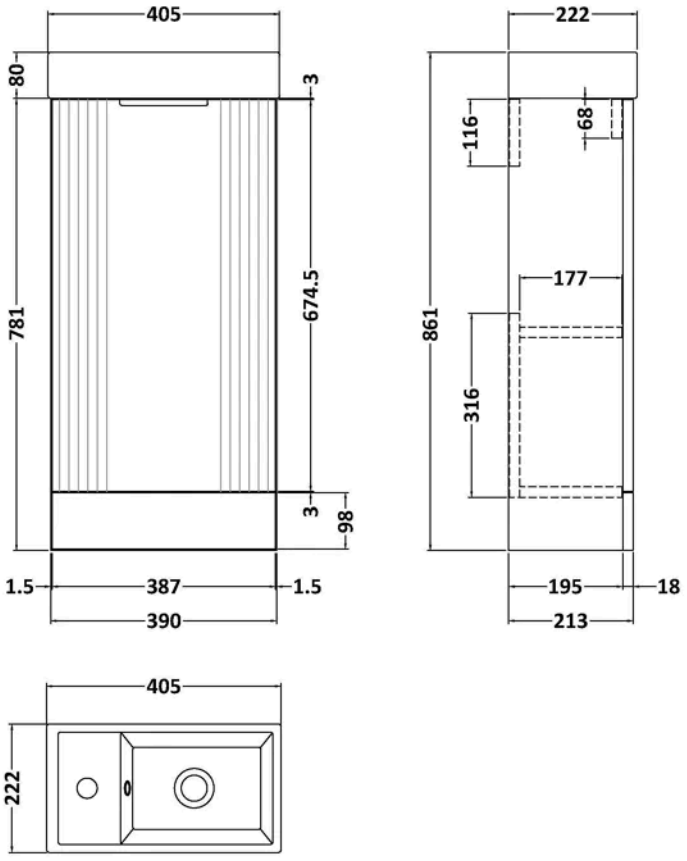

Product Dimensions

Product	781 x 400 x 222mm (H x W x D)
Packaged	830 x 240 x 410mm (H x W x D)
Nett Weight	17.5 kg
Packaged Weight	18.5 kg

Packaging Details

Box Qty	1

Product Details

Country of Origin	China
Product Material	Mfc Painted Matt
Colour/Finish	Soft Black
Mount Type	Floor
Style	Contemporary
Handle Type	Finger Pull
Construction Method	Cam & Wood Dowel
Ce Certified	No
Construction Type	Rigid
Fascia Finish	Mfc Painted Matt
Fsc Certified	Yes
Handles Included	Yes
Leg Set Included	No
Material Thickness	16 mm
No. Doors	1
No. Shelves	1
Number Of Shelves	1
Waste Shroud	No

© ROXOR Group

Sales Code: FLT1441 **Barcode:** 5056462661186 **Brand:** nuie **Description:** nuie Deco Soft Black 500mm WC Unit



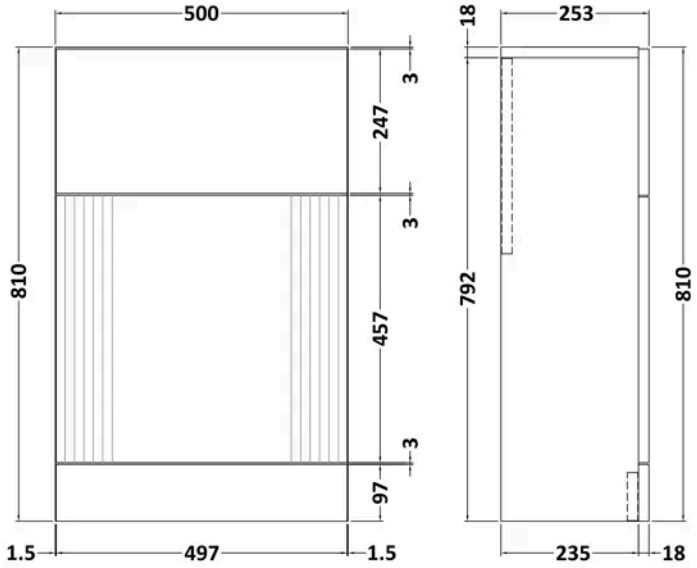

Product Dimensions

Product	810 x 500 x 253mm (H x W x D)
Packaged	830 x 620 x 275mm (H x W x D)
Nett Weight	18.5 kg
Packaged Weight	19 kg

Packaging Details

Box Qty	1

Product Details

Country of Origin	China
Product Material	Mfc Painted Gloss
Colour/Finish	Soft Black
Mount Type	Floor
Style	Contemporary
Construction Method	Cam & Wood Dowel
Construction Type	Rigid
Fascia Finish	Mfc Painted Gloss
Fsc Certified	Yes
Material Thickness	16 mm

© ROXOR Group

Sales Code: H324 **Barcode:** 5056462656496 **Brand:** nuie **Description:** 150mm Brushed Brass Finger Pull Handle

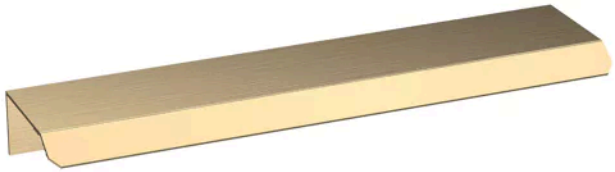

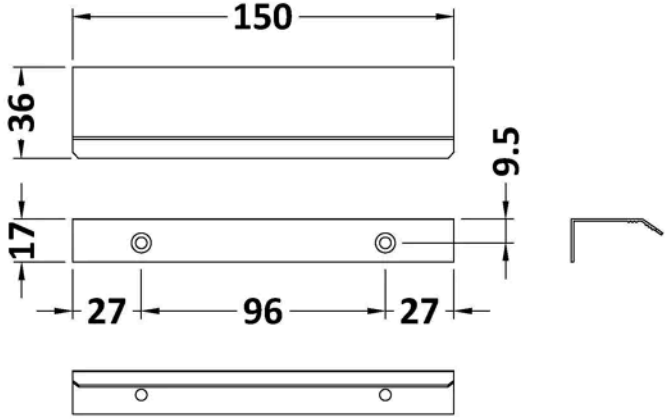

Product Dimensions

Product	17 x 150 x 36mm (H x W x D)
Packaged	30 x 20 x 150mm (H x W x D)
Nett Weight	0.02 kg
Packaged Weight	0.02 kg

Packaging Details

Box Qty	1
Label Size (mm)	50 x 100
Label Colour	White
Label Qty	1.0000

Product Details

Country of Origin	China
Product Material	Aluminium
Colour/Finish	Brushed Brass
Style	Contemporary
Handle Type	Finger Pull
Fixings Included	Yes

© ROXOR Group

Sales Code: MDPB03 **Barcode:** 5056211893158 **Brand:** nuie **Description:** Square Brushed Brass Dual Flush Push Button

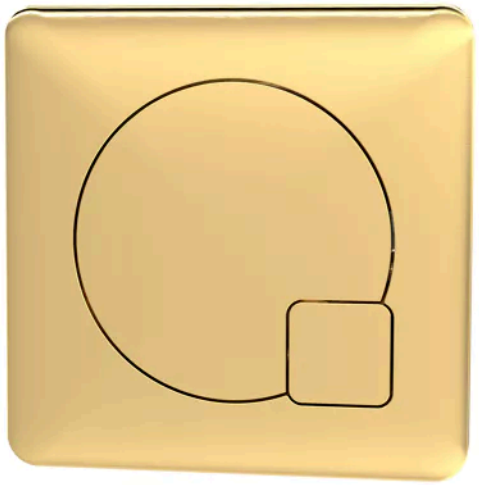

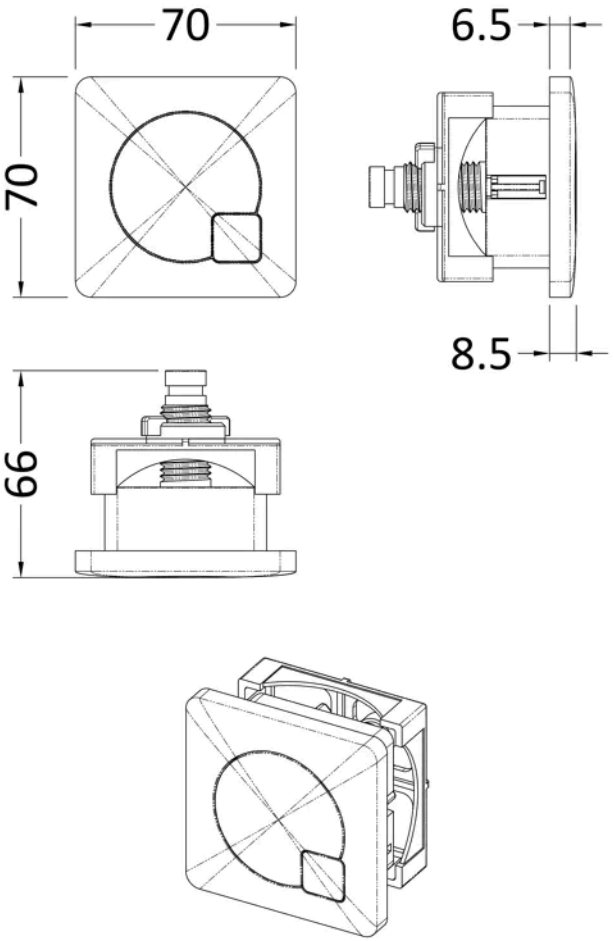

Product Dimensions

Product	70 x 70 x 99mm (H x W x D)
Packaged	80 x 155 x 80mm (H x W x D)
Nett Weight	0.2 kg
Packaged Weight	0.2 kg

Packaging Details

Box Qty	1
Label Size (mm)	50 x 100
Label Colour	White
Label Qty	1.0000

Product Details

Country of Origin	China
Product Material	Abs
Colour/Finish	Brushed Brass
Style	Contemporary
Fixings Included	Yes

© ROXOR Group

Sales Code: NCG406 **Barcode:** 5056211872023 **Brand:** nuie **Description:** nuie Ava Round Back to Wall Toilet Pan With Seat



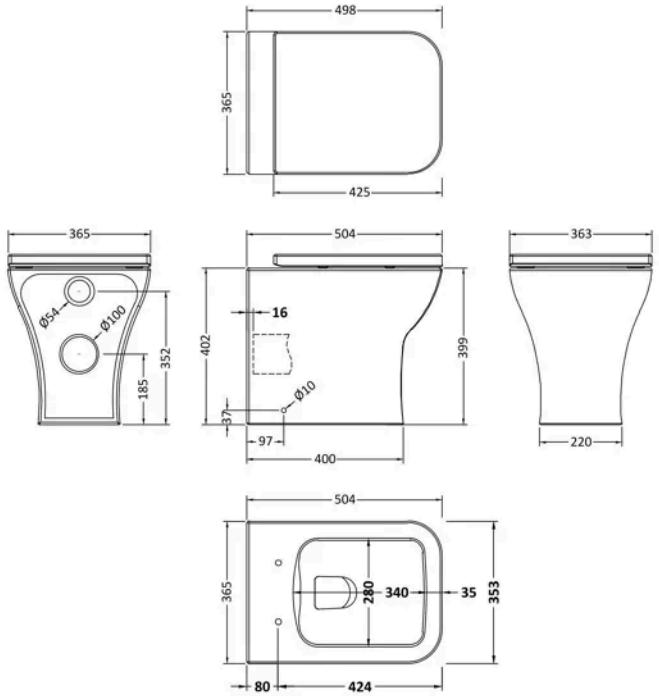

Product Dimensions

Product	410 x 365 x 500mm (H x W x D)
Packaged	420 x 395 x 540mm (H x W x D)
Nett Weight	22 kg
Packaged Weight	22.59 kg

Packaging Details

Box Qty	1
Label Size (mm)	50 x 100
Label Colour	White
Label Qty	2.0000

Product Details

Country of Origin	China
Product Material	Polypropylene,Stainless Steel,Vitreous China
Colour/Finish	White
Style	Contemporary
Fixings Included	No
Ce Certified	Yes
Declaration Of Performance	No
Includes Seat	Yes
Pan Trap Style	P-Trap
Pan Type	Back To Wall
Toilet Seat Function	Soft Close
Toilet Seat Hinge Type	Quick Release,Top Fix
Toilet Seat Type	Square
Ukca Certified	No

© ROXOR Group

Sales Code: WIN805 **Barcode:** 5056462621012 **Brand:** nuie **Description:** nuie Windon Brushed Brass Mono Basin Mixer With Push Button Waste



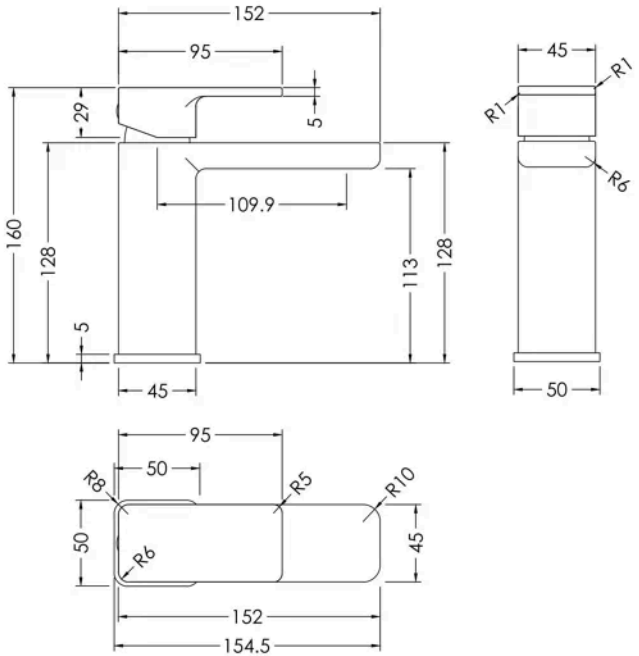

Product Dimensions

Product	160 x 50 x 155mm (H x W x D)
Packaged	95 x 240 x 285mm (H x W x D)
Outer Box	500 x 500 x 300mm (H x W x D)
Nett Weight	2 kg
Packaged Weight	2.2 kg

Packaging Details

Box Qty	1
Label Size (mm)	50 x 100
Label Colour	White
Label Qty	1.0000

Product Details

Country of Origin	China
Product Material	Brass,Plastic
Control Type	Manual
Waste Type	Push Button
WRAS Approved	Yes
Valve/Cartridge Type	Single Lever Cartridge
Colour/Finish	Brushed Brass
Mount Type	Deck
Style	Contemporary
Handle Type	Lever/Square
TMV2 Approved	No
TMV3 Approved	No
Pipe Size	1/2"
Min Operating Pressure	0.2 Bar
Tap Spout Height	113 mm
Tap Spout Projection	110 mm
Tap Tails Included	Yes
Valve / Cartridge Type	Single Lever Cartridge
Waste Included	Yes
Wras Approval No	2204060

© ROXOR Group

Sales Code: XTY006 **Barcode:** 5055146182566 **Brand:** nuie **Description:** Dual Flush Concealed Cistern with Chrome Flush Button



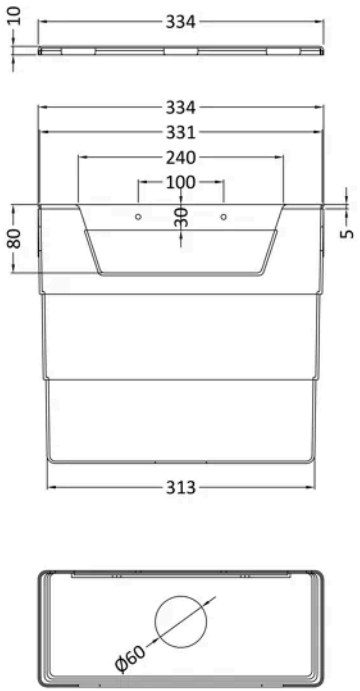

Product Dimensions

Product	303 x 334 x 136mm (H x W x D)
Packaged	320 x 145 x 345mm (H x W x D)
Nett Weight	1.8 kg
Packaged Weight	2 kg

Packaging Details

Box Qty	1
Label Size (mm)	50 x 100
Label Colour	White
Label Qty	2.0000

Product Details

Country of Origin	China
Product Material	Polyethylene
Colour/Finish	Chrome
Style	Contemporary
Ce Certified	Yes
Ukca Certified	Yes

© ROXOR Group