Sales Code: FUZDE004 **Barcode:** 5056678405222 **Brand:** nuie **Description:** nuie Deco 400mm Satin Blue Wall Hung Cloakroom Suite



Technical Drawing Not Available

Product Dimensions

Product	438 x 400 x 222mm (H x W x D)
Packaged	550 x 550 x 550mm (H x W x D)
Nett Weight	56.1 kg
Packaged Weight	56.6 kg

Packaging Details

Box Qty	7

Product Details

Country of Origin	China
Product Material	Brass,Polypropylene,Stainless Steel
Colour/Finish	Satin Blue
Mount Type	Floor,Wall Hung
Style	Contemporary
Handle Type	Finger Pull
Construction Method	Cam & Wood Dowel
Construction Type	Rigid
Fascia Finish	Mfc Painted Matt
Handles Included	Yes
Includes Seat	Yes
Material Thickness	16 mm
Min Operating Pressure	0.2 Bar
No. Doors	1
No. Of Tapholes	1
Number Of Bowls	1
Overflow Included	Yes
Pan Trap Style	P-Trap
Pan Type	Back To Wall
Tap Included	Yes
Toilet Seat Function	Soft Close
Toilet Seat Hinge Type	Quick Release,Top Fix
Toilet Seat Type	Square
Waste Included	Yes

© ROXOR Group

Sales Code: FLT341 **Barcode:** 5056462655628 **Brand:** nuie **Description:** nuie Deco Satin Blue 500mm WC Unit



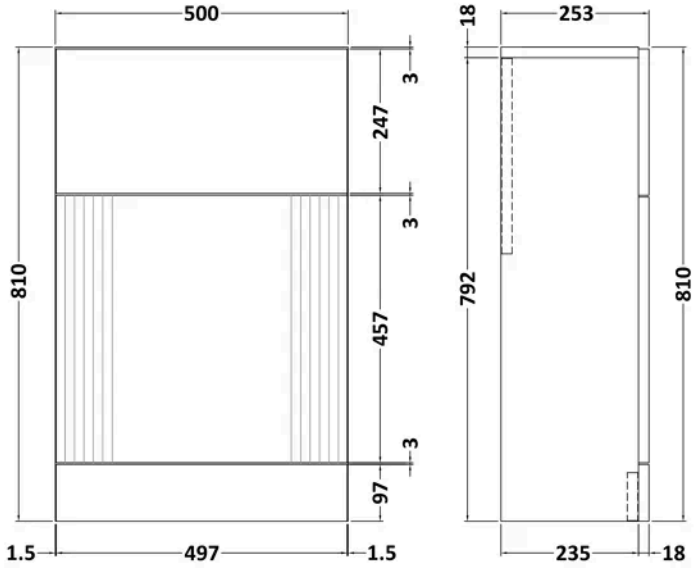

Product Dimensions

Product	810 x 500 x 253mm (H x W x D)
Packaged	830 x 620 x 275mm (H x W x D)
Nett Weight	18.5 kg
Packaged Weight	19 kg

Packaging Details

Box Qty	1

Product Details

Country of Origin	China
Product Material	Mfc Painted Gloss
Colour/Finish	Satin Blue
Mount Type	Floor
Style	Contemporary
Construction Method	Cam & Wood Dowel
Construction Type	Rigid
Fascia Finish	Mfc Painted Gloss
Fsc Certified	Yes
Material Thickness	16 mm

© ROXOR Group

Sales Code: FLT390 **Barcode:** 5056462643052 **Brand:** nuie **Description:** nuie Deco Compact Satin Blue 400mm 1 Door Wall Hung Vanity Unit With Ceramic Basin



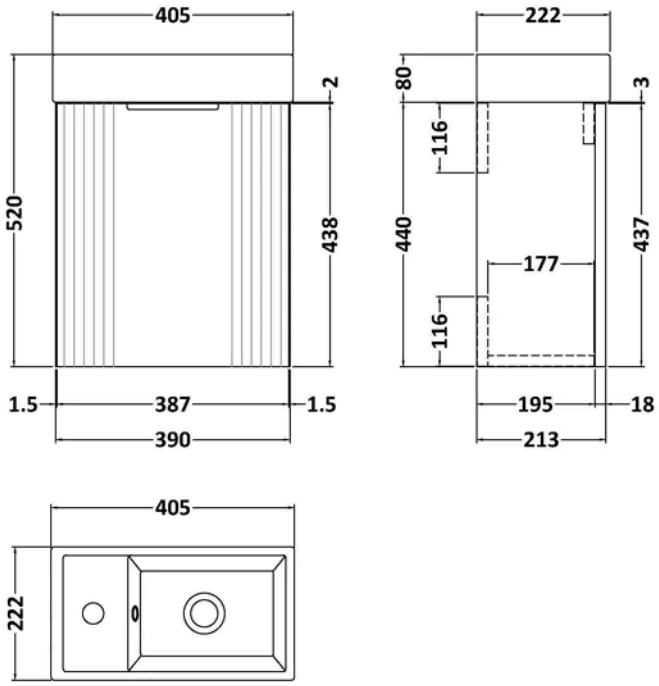

Product Dimensions

Product	438 x 400 x 222mm (H x W x D)
Packaged	465 x 245 x 410mm (H x W x D)
Nett Weight	12 kg
Packaged Weight	12.8 kg

Packaging Details

Box Qty	1

Product Details

Country of Origin	China
Product Material	Mfc Painted Matt
Colour/Finish	Satin Blue
Mount Type	Wall Hung
Style	Contemporary
Handle Type	Finger Pull
Construction Method	Cam & Wood Dowel
Ce Certified	No
Construction Type	Rigid
Fascia Finish	Mfc Painted Matt
Fsc Certified	Yes
Handles Included	Yes
Leg Set Included	No
Material Thickness	16 mm
No. Doors	1
Waste Shroud	No

© ROXOR Group

Sales Code: H324 **Barcode:** 5056462656496 **Brand:** nuie **Description:** 150mm Brushed Brass Finger Pull Handle

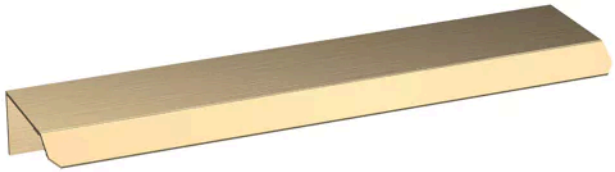

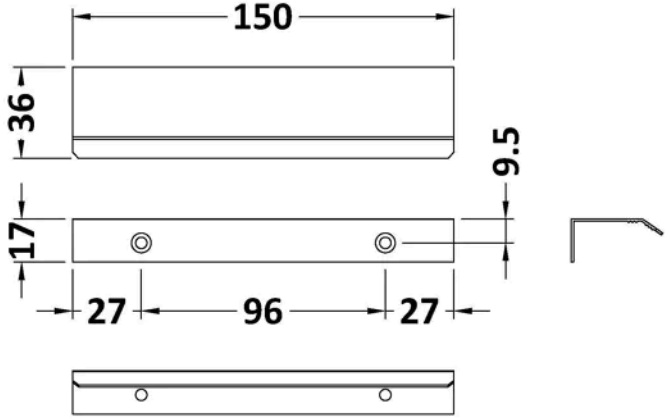

Product Dimensions

Product	17 x 150 x 36mm (H x W x D)
Packaged	30 x 20 x 150mm (H x W x D)
Nett Weight	0.02 kg
Packaged Weight	0.02 kg

Packaging Details

Box Qty	1
Label Size (mm)	50 x 100
Label Colour	White
Label Qty	1.0000

Product Details

Country of Origin	China
Product Material	Aluminium
Colour/Finish	Brushed Brass
Style	Contemporary
Handle Type	Finger Pull
Fixings Included	Yes

© ROXOR Group

Sales Code: MDPB03 **Barcode:** 5056211893158 **Brand:** nuie **Description:** Square Brushed Brass Dual Flush Push Button

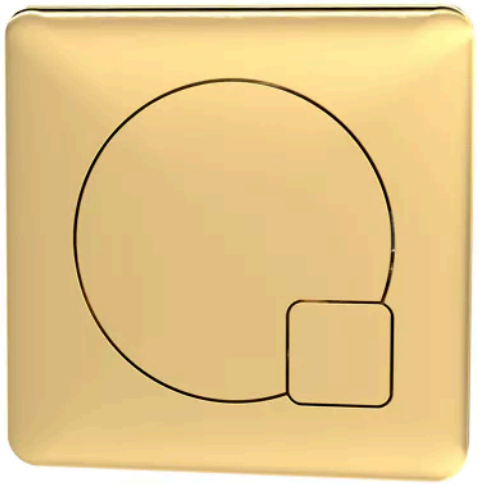

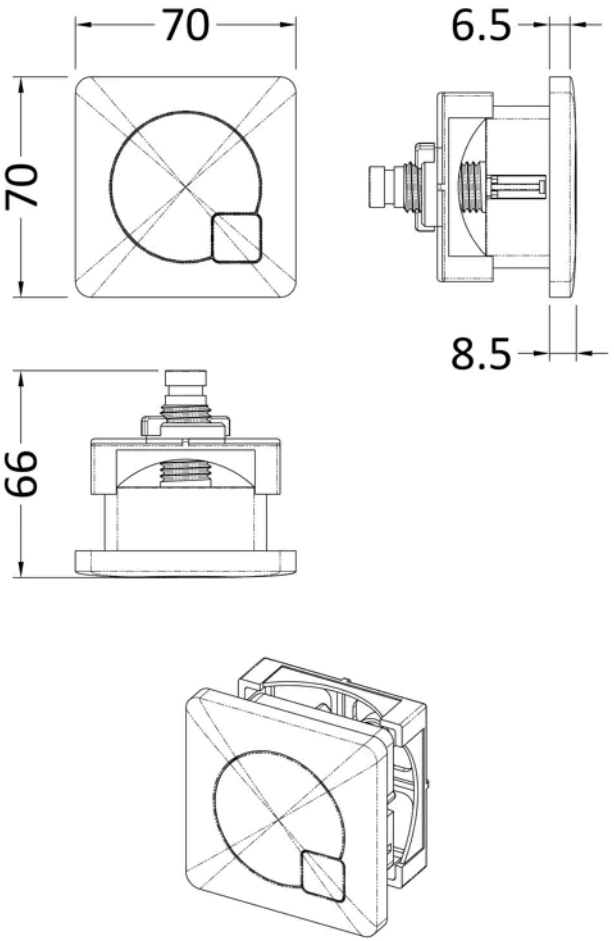

Product Dimensions

Product	70 x 70 x 99mm (H x W x D)
Packaged	80 x 155 x 80mm (H x W x D)
Nett Weight	0.2 kg
Packaged Weight	0.2 kg

Packaging Details

Box Qty	1
Label Size (mm)	50 x 100
Label Colour	White
Label Qty	1.0000

Product Details

Country of Origin	China
Product Material	Abs
Colour/Finish	Brushed Brass
Style	Contemporary
Fixings Included	Yes

© ROXOR Group

Sales Code: NCG406 **Barcode:** 5056211872023 **Brand:** nuie **Description:** nuie Ava Round Back to Wall Toilet Pan With Seat



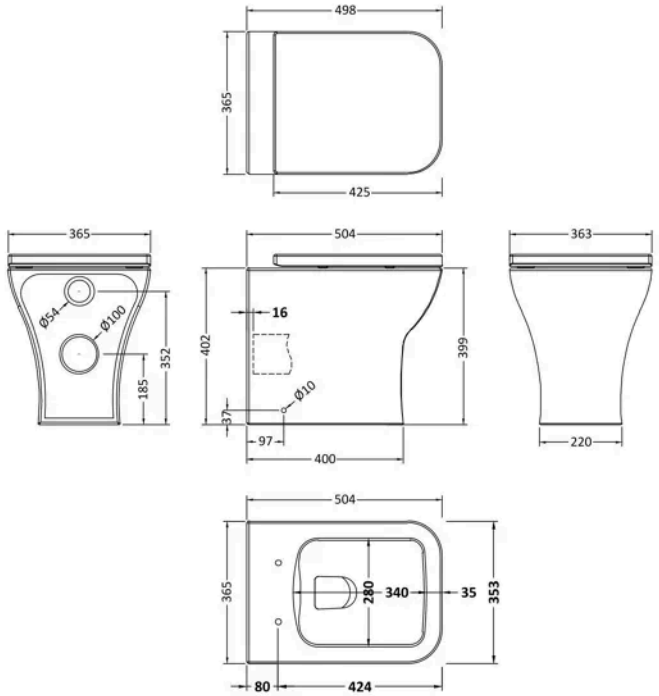

Product Dimensions

Product	410 x 365 x 500mm (H x W x D)
Packaged	420 x 395 x 540mm (H x W x D)
Nett Weight	22 kg
Packaged Weight	22.59 kg

Packaging Details

Box Qty	1
Label Size (mm)	50 x 100
Label Colour	White
Label Qty	2.0000

Product Details

Country of Origin	China
Product Material	Polypropylene,Stainless Steel,Vitreous China
Colour/Finish	White
Style	Contemporary
Fixings Included	No
Ce Certified	Yes
Declaration Of Performance	No
Includes Seat	Yes
Pan Trap Style	P-Trap
Pan Type	Back To Wall
Toilet Seat Function	Soft Close
Toilet Seat Hinge Type	Quick Release,Top Fix
Toilet Seat Type	Square
Ukca Certified	No

© ROXOR Group

Sales Code: WIN805 **Barcode:** 5056462621012 **Brand:** nuie **Description:** nuie Windon Brushed Brass Mono Basin Mixer With Push Button Waste



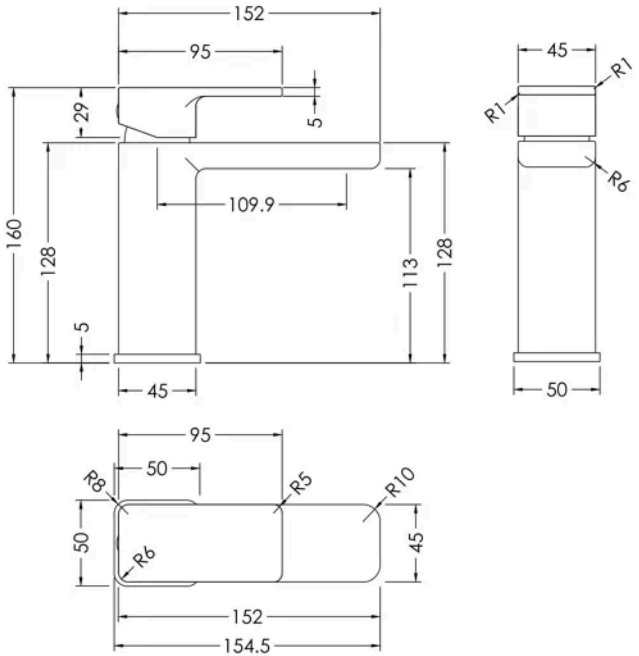

Product Dimensions

Product	160 x 50 x 155mm (H x W x D)
Packaged	95 x 240 x 285mm (H x W x D)
Outer Box	500 x 500 x 300mm (H x W x D)
Nett Weight	2 kg
Packaged Weight	2.2 kg

Packaging Details

Box Qty	1
Label Size (mm)	50 x 100
Label Colour	White
Label Qty	1.0000

Product Details

Country of Origin	China
Product Material	Brass,Plastic
Control Type	Manual
Waste Type	Push Button
WRAS Approved	Yes
Valve/Cartridge Type	Single Lever Cartridge
Colour/Finish	Brushed Brass
Mount Type	Deck
Style	Contemporary
Handle Type	Lever/Square
TMV2 Approved	No
TMV3 Approved	No
Pipe Size	1/2"
Min Operating Pressure	0.2 Bar
Tap Spout Height	113 mm
Tap Spout Projection	110 mm
Tap Tails Included	Yes
Valve / Cartridge Type	Single Lever Cartridge
Waste Included	Yes
Wras Approval No	2204060

© ROXOR Group

Sales Code: XTY006 **Barcode:** 5055146182566 **Brand:** nuie **Description:** Dual Flush Concealed Cistern with Chrome Flush Button



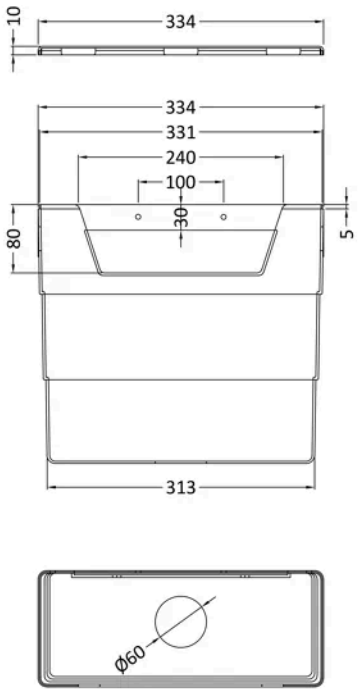

Product Dimensions

Product	303 x 334 x 136mm (H x W x D)
Packaged	320 x 145 x 345mm (H x W x D)
Nett Weight	1.8 kg
Packaged Weight	2 kg

Packaging Details

Box Qty	1
Label Size (mm)	50 x 100
Label Colour	White
Label Qty	2.0000

Product Details

Country of Origin	China
Product Material	Polyethylene
Colour/Finish	Chrome
Style	Contemporary
Ce Certified	Yes
Ukca Certified	Yes

© ROXOR Group