Sales Code: FLT892 **Barcode:** 5056462655390 **Brand:** nuie **Description:** nuie Deco 500mm Satin Green 2 Drawer Wall Hung Vanity Unit



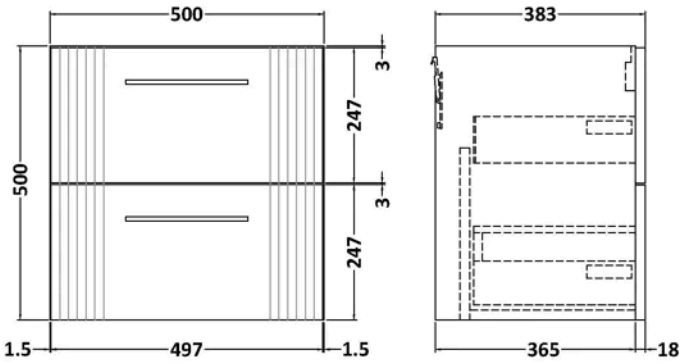

Product Dimensions

Product	500 x 500 x 383mm (H x W x D)
Packaged	520 x 520 x 405mm (H x W x D)
Nett Weight	18.5 kg
Packaged Weight	19 kg

Packaging Details

Box Qty	1

Product Details

Country of Origin	China
Product Material	Mdf Painted Matt
Colour/Finish	Satin Green
Mount Type	Wall Hung
Style	Contemporary
Construction Method	Cam & Wood Dowel
Construction Type	Rigid
Fascia Finish	Mdf Painted Matt
Handles Included	Yes
Material Thickness	18 mm
No. Drawers	2

© ROXOR Group