Sales Code: FLT323 **Barcode:** 5056462655307 **Brand:** nuie **Description:** nuie Deco 500mm Satin Blue 2 Door Floor Standing Vanity Unit



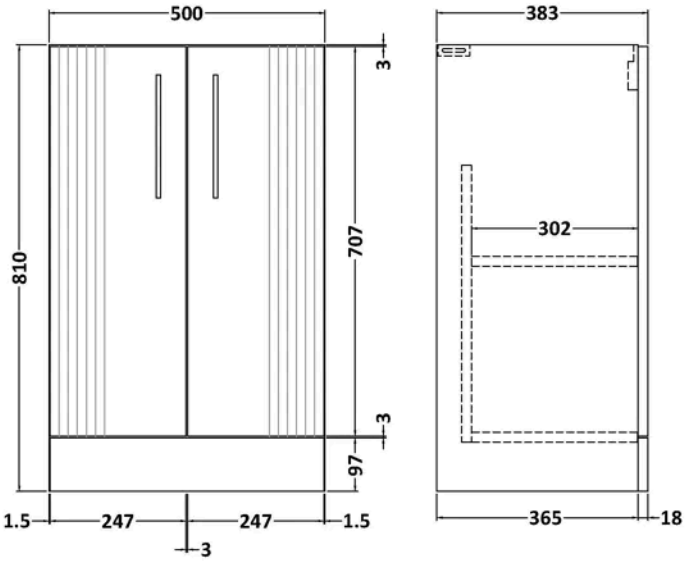

Product Dimensions

Product	810 x 500 x 383mm (H x W x D)
Packaged	830 x 520 x 405mm (H x W x D)
Nett Weight	21.5 kg
Packaged Weight	22 kg

Packaging Details

Box Qty	1

Product Details

Country of Origin	China
Product Material	Mdf Painted Matt
Colour/Finish	Satin Blue
Mount Type	Floor
Style	Contemporary
Construction Method	Cam & Wood Dowel
Construction Type	Rigid
Fascia Finish	Mdf Painted Matt
Handles Included	Yes
Material Thickness	18 mm
No. Doors	2
No. Shelves	1
Number Of Shelves	1

© ROXOR Group