Sales Code: FLT125 **Barcode:** 5056462655406 **Brand:** nuie **Description:** nuie Deco 600mm Satin White 2 Door Floor Standing Vanity Unit



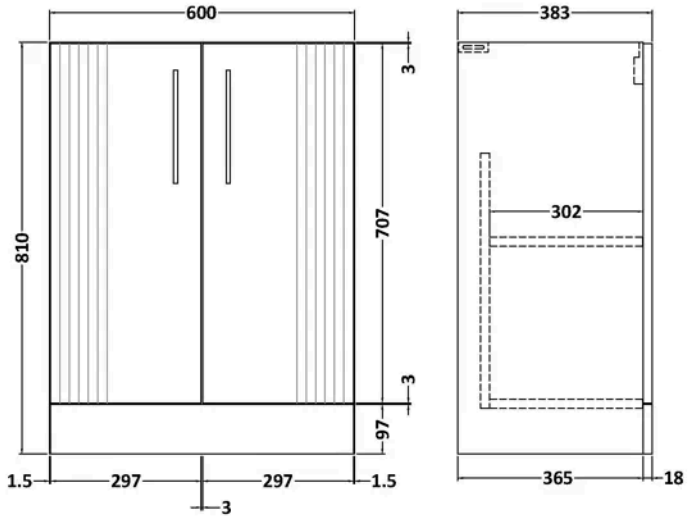

Product Dimensions

Product	810 x 600 x 383mm (H x W x D)
Packaged	830 x 620 x 405mm (H x W x D)
Nett Weight	26.2 kg
Packaged Weight	26.7 kg

Packaging Details

Box Qty	1

Product Details

Country of Origin	China
Product Material	Mdf Painted Matt
Colour/Finish	Satin White
Mount Type	Floor
Style	Contemporary
Handle Type	D Shape
Construction Method	Cam & Wood Dowel
Construction Type	Rigid
Fascia Finish	Mdf Painted Gloss
Fsc Certified	Yes
Handles Included	Yes
Leg Set Included	No
Material Thickness	16 mm
No. Doors	2

© ROXOR Group