Sales Code: FFLR3123L

Barcode: 5064007079129

Brand: nuie Lux

Description: nuie lux Krest 1200mm Fern Green Left-Hand Fitted Vanity & WC Combination Unit with L-Shaped Polymarble Basin

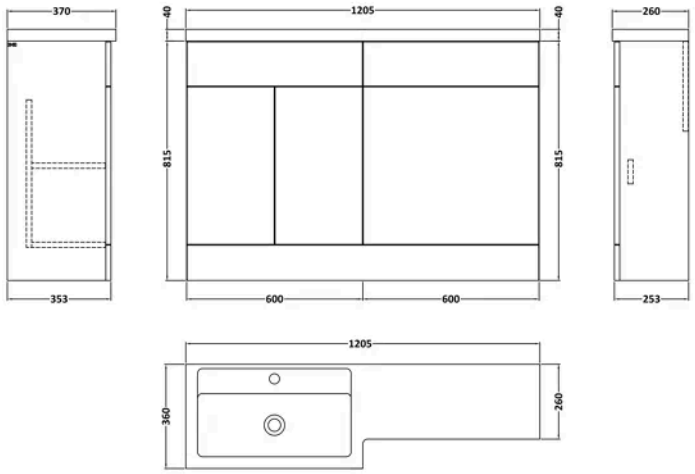

Product Dimensions

Product	815 x 1200 x 335mm (H x W x D)
Packaged	550 x 550 x 550mm (H x W x D)
Nett Weight	65 kg
Packaged Weight	66 kg

Product Details

Country of Origin	United Kingdom
Product Material	Mfc Smooth Matt,Polymarble
Colour/Finish	Fern Green
Mount Type	Floor
Style	Contemporary
Fixings Included	Yes
Construction Method	Cam & Wood Dowel
Construction Type	Rigid
Drawer Type	80mm High Metal S/C Inc Gallery
Fascia Finish	Mdf Vinyl Smooth Matt
Handles Included	Yes
Material Thickness	18 mm
No. Doors	2
No. Of Tapholes	1
Number Of Bowls	1
Overflow Included	Yes
Tap Included	No

© ROXOR Group

Sales Code: FFL3108 **Barcode:** 5056817721466 **Brand:** nuie Lux **Description:** nuie lux Krest 600mm Fern Green Slab Floor Standing Vanity Unit 353mm Deep

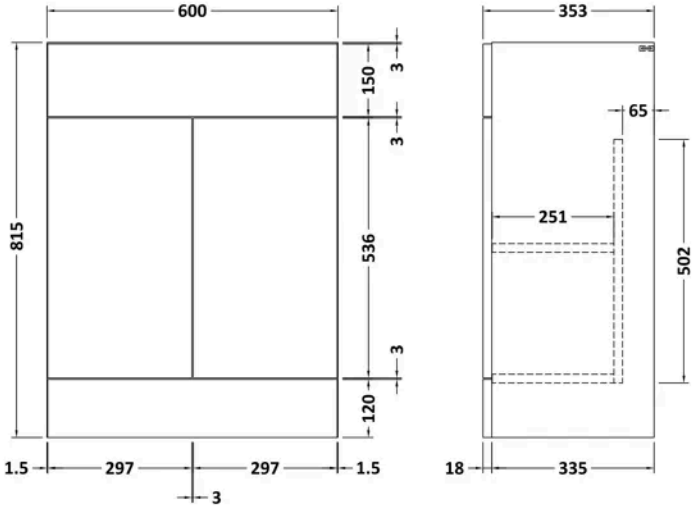

Product Dimensions

Product	815 x 600 x 353mm (H x W x D)
Packaged	375 x 620 x 900mm (H x W x D)
Nett Weight	34 kg
Packaged Weight	34.5 kg

Packaging Details

Box Qty	1

Product Details

Country of Origin	United Kingdom
Product Material	Mfc Smooth Matt
Colour/Finish	Fern Green
Mount Type	Floor
Style	Contemporary
Construction Method	Cam & Wood Dowel
Ce Certified	Yes
Construction Type	Rigid
Fascia Finish	Mdf Vinyl Smooth Matt
Fsc Certified	Yes
Handles Included	No
Material Thickness	18 mm
No. Doors	2
No. Shelves	1
Number Of Shelves	1
Waste Shroud	No

© ROXOR Group

Sales Code: FFL3147 **Barcode:** 5056817715991 **Brand:** nuie Lux **Description:** nuie lux Krest 600mm Fern Green 253mm Deep Slab Floor Standing WC Unit

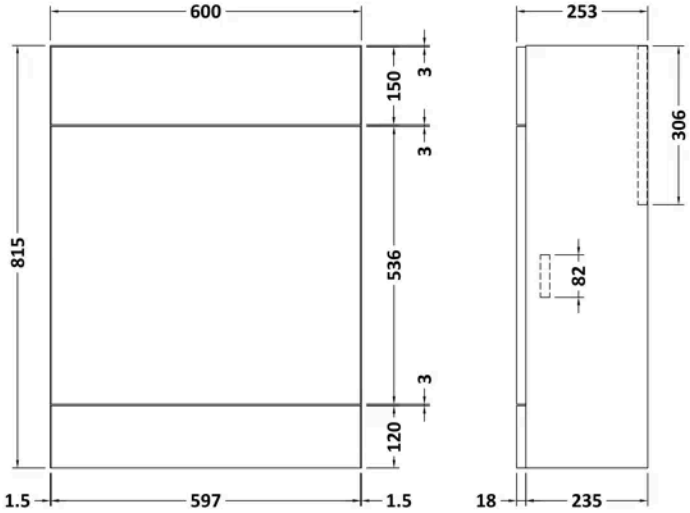

Product Dimensions

Product	815 x 600 x 253mm (H x W x D)
Packaged	860 x 630 x 300mm (H x W x D)
Nett Weight	13.5 kg
Packaged Weight	14 kg

Packaging Details

Box Qty	1

Product Details

Country of Origin	United Kingdom
Product Material	Mfc Smooth Matt
Colour/Finish	Fern Green
Mount Type	Floor
Style	Contemporary
Construction Method	Cam & Wood Dowel
Ce Certified	Yes
Construction Type	Rigid
Fascia Finish	Mdf Vinyl Smooth Matt
Fsc Certified	Yes
Material Thickness	18 mm

© ROXOR Group

Sales Code: H182 **Barcode:** 5056211874867 **Brand:** nuie **Description:** 150mm Chrome D Handle

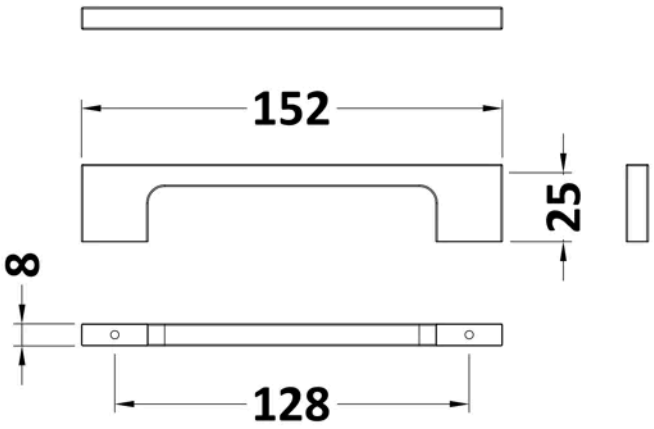

Product Dimensions

Product	150 x 20 x 30mm (H x W x D)
Packaged	20 x 30 x 180mm (H x W x D)
Nett Weight	0.25 kg
Packaged Weight	0.25 kg

Packaging Details

Box Qty	1
Label Size (mm)	50 x 100
Label Colour	White
Label Qty	1.0000

Product Details

Country of Origin	China
Product Material	Brass
Colour/Finish	Chrome
Style	Contemporary
Handle Type	D Shape
Fixings Included	Yes

© ROXOR Group

Sales Code: LXPB414L **Barcode:** 5056817724788 **Brand:** nuie Lux **Description:** nuie lux 1200mm 1 Tap Hole Left Hand Polymarble Basin

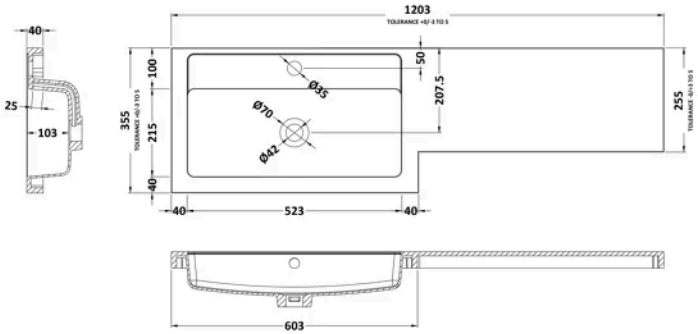

Product Dimensions

Product	135 x 1203 x 355mm (H x W x D)
Packaged	190 x 420 x 1260mm (H x W x D)
Nett Weight	17 kg
Packaged Weight	17 kg

Packaging Details

Box Qty	1

Product Details

Country of Origin	China
Product Material	Polymarble
Colour/Finish	White
Style	Contemporary
Ce Certified	Yes
Inner Bowl Height	103 mm
No. Of Tapholes	1
Number Of Bowls	1
Overflow Included	Yes
Tap Included	No
Waste Included	No

© ROXOR Group