Sales Code: FFHR3222L

Barcode: 5064007079266

Brand: nuie Lux

Description: nuie lux Fable 1100mm Pebble Grey Left-Hand Fitted 2 Drawer Vanity & WC Combination Unit with L-Shaped Polymarble Basin

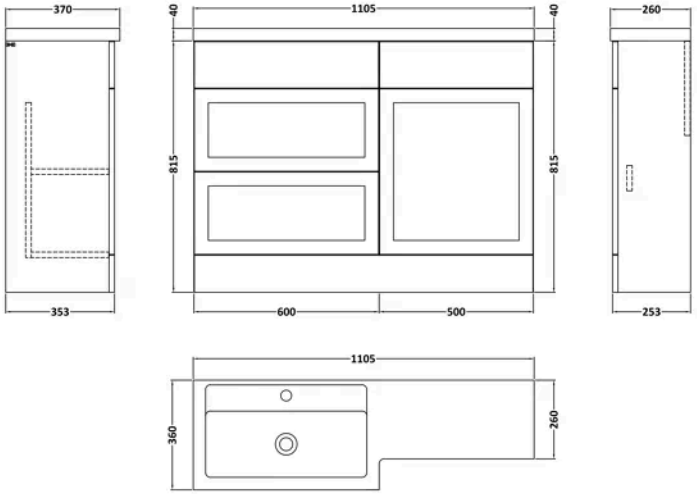

Product Dimensions

Product	815 x 1100 x 355mm (H x W x D)
Packaged	550 x 550 x 550mm (H x W x D)
Nett Weight	47.5 kg
Packaged Weight	48.5 kg

Product Details

Country of Origin	United Kingdom
Product Material	Mfc Smooth Matt,Polymarble
Colour/Finish	Pebble Grey
Mount Type	Floor
Style	Traditional
Fixings Included	Yes
Construction Method	Cam & Wood Dowel
Construction Type	Rigid
Drawer Type	80mm High Metal S/C Inc Gallery
Fascia Finish	Mdf Vinyl Smooth Matt
Handles Included	Yes
Material Thickness	18 mm
No. Drawers	2
No. Of Tapholes	1
Number Of Bowls	1
Overflow Included	Yes
Tap Included	No

© ROXOR Group

Sales Code: FFH3210 **Barcode:** 5056817715717 **Brand:** nuie Lux **Description:** nuie lux Fable 600mm Pebble Grey Floor Standing Cabinet

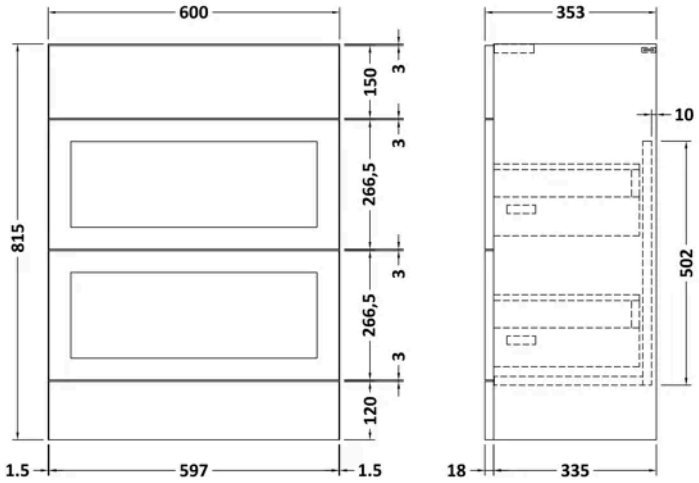

Product Dimensions

Product	815 x 600 x 353mm (H x W x D)
Packaged	860 x 630 x 385mm (H x W x D)
Nett Weight	20 kg
Packaged Weight	20.5 kg

Packaging Details

Box Qty	1

Product Details

Country of Origin	United Kingdom
Product Material	Mfc Smooth Matt
Colour/Finish	Pebble Grey
Mount Type	Floor
Style	Traditional
Construction Method	Cam & Wood Dowel
Ce Certified	Yes
Construction Type	Rigid
Drawer Type	80mm High Metal S/C Inc Gallery
Fascia Finish	Mdf Vinyl Smooth Matt
Fsc Certified	Yes
Handles Included	No
Leg Set Included	No
Material Thickness	18 mm
No. Drawers	2

© ROXOR Group

Sales Code: FFH3245 **Barcode:** 5056817715731 **Brand:** nuie Lux **Description:** nuie lux Fable 500mm Pebble Grey 253mm Deep Shaker Floor Standing WC Unit

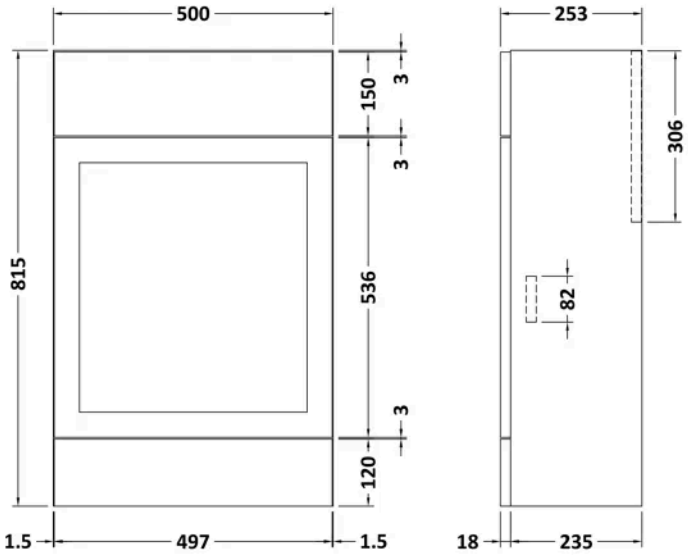

Product Dimensions

Product	815 x 500 x 253mm (H x W x D)
Packaged	860 x 530 x 300mm (H x W x D)
Nett Weight	11 kg
Packaged Weight	11.5 kg

Packaging Details

Box Qty	1

Product Details

Country of Origin	United Kingdom
Product Material	Mfc Smooth Matt
Colour/Finish	Pebble Grey
Mount Type	Floor
Style	Traditional
Construction Method	Cam & Wood Dowel
Ce Certified	Yes
Construction Type	Rigid
Fascia Finish	Mdf Vinyl Smooth Matt
Fsc Certified	Yes
Material Thickness	18 mm

© ROXOR Group

Sales Code: H182 **Barcode:** 5056211874867 **Brand:** nuie **Description:** 150mm Chrome D Handle

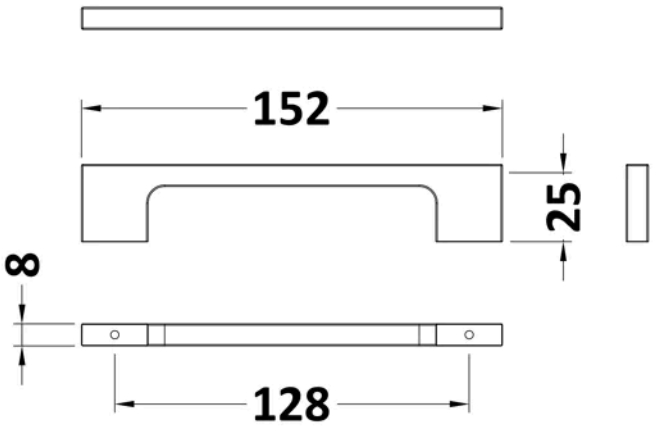

Product Dimensions

Product	150 x 20 x 30mm (H x W x D)
Packaged	20 x 30 x 180mm (H x W x D)
Nett Weight	0.25 kg
Packaged Weight	0.25 kg

Packaging Details

Box Qty	1
Label Size (mm)	50 x 100
Label Colour	White
Label Qty	1.0000

Product Details

Country of Origin	China
Product Material	Brass
Colour/Finish	Chrome
Style	Contemporary
Handle Type	D Shape
Fixings Included	Yes

© ROXOR Group

Sales Code: LXPB413L **Barcode:** 5056817724764 **Brand:** nuie Lux **Description:** nuie lux 1100mm 1 Tap Hole Left Hand Polymarble Basin

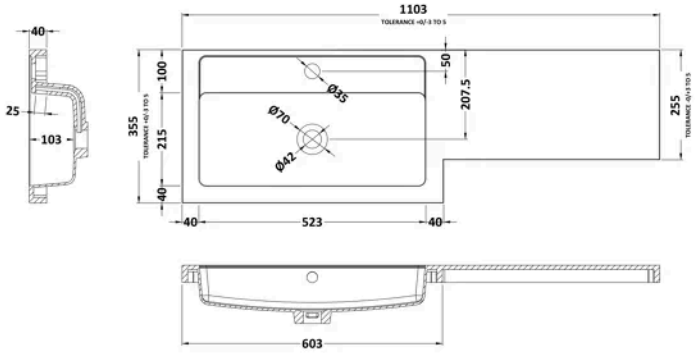

Product Dimensions

Product	135 x 1103 x 355mm (H x W x D)
Packaged	190 x 420 x 1160mm (H x W x D)
Nett Weight	16 kg
Packaged Weight	16 kg

Packaging Details

Box Qty	1

Product Details

Country of Origin	China
Product Material	Polymarble
Colour/Finish	White
Style	Contemporary
Ce Certified	Yes
Inner Bowl Height	103 mm
No. Of Tapholes	1
Number Of Bowls	1
Overflow Included	Yes
Tap Included	No
Waste Included	No

© ROXOR Group