Sales Code: FFHR3126

Barcode: 5064007079969

Brand: nuie Lux

Description: nuie lux Fable 2000mm Fern Green Fitted Combination Unit with Tall Unit, Carrera Marble Worktop & Rectangular Vessel Basin

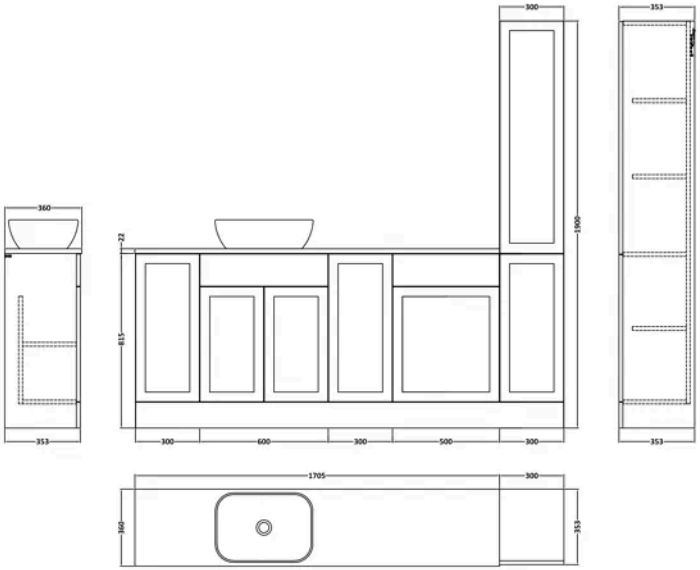

Product Dimensions

Product	1900 x 2000 x 355mm (H x W x D)
Packaged	550 x 550 x 550mm (H x W x D)
Nett Weight	122.3 kg
Packaged Weight	125 kg

Product Details

Country of Origin	United Kingdom
Product Material	Mfc Smooth Matt,Polymarble
Colour/Finish	Fern Green
Mount Type	Floor
Style	Traditional
Fixings Included	Yes
Construction Method	Cam & Wood Dowel
Construction Type	Rigid
Drawer Type	80mm High Metal S/C Inc Gallery
Fascia Finish	Mdf Vinyl Smooth Matt
Handles Included	Yes
Material Thickness	18 mm
No. Doors	5
No. Of Tapholes	1
Number Of Bowls	1
Overflow Included	Yes
Tap Included	No

© ROXOR Group

Sales Code: FFH3108 **Barcode:** 5056817722012 **Brand:** nuie Lux **Description:** nuie lux Fable 600mm Fern Green Shaker Floor Standing Vanity Unit 353mm Deep

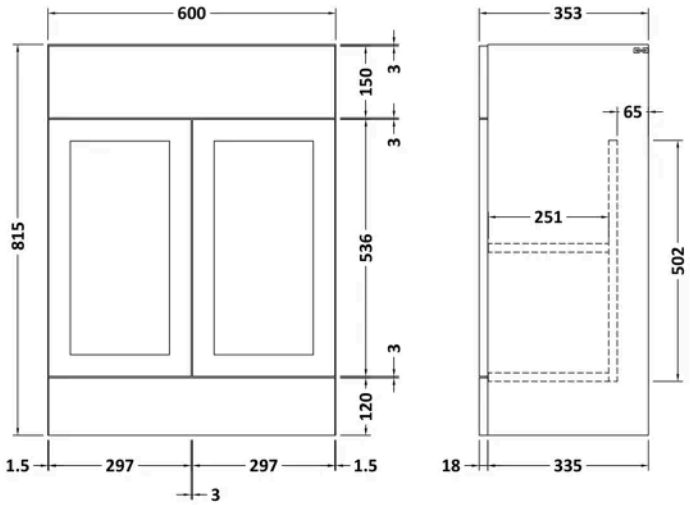

Product Dimensions

Product	815 x 600 x 353mm (H x W x D)
Packaged	375 x 620 x 900mm (H x W x D)
Nett Weight	34 kg
Packaged Weight	34.5 kg

Packaging Details

Box Qty	1

Product Details

Country of Origin	United Kingdom
Product Material	Mfc Smooth Matt
Colour/Finish	Fern Green
Mount Type	Floor
Style	Traditional
Construction Method	Cam & Wood Dowel
Ce Certified	Yes
Construction Type	Rigid
Fascia Finish	Mdf Vinyl Smooth Matt
Fsc Certified	Yes
Handles Included	No
Material Thickness	18 mm
No. Doors	2
No. Shelves	1
Number Of Shelves	1
Waste Shroud	No

© ROXOR Group

Sales Code: FFH3146 **Barcode:** 5056817715687 **Brand:** nuie Lux **Description:** nuie lux Fable 500mm Fern Green 353mm Deep Shaker Floor Standing WC Unit

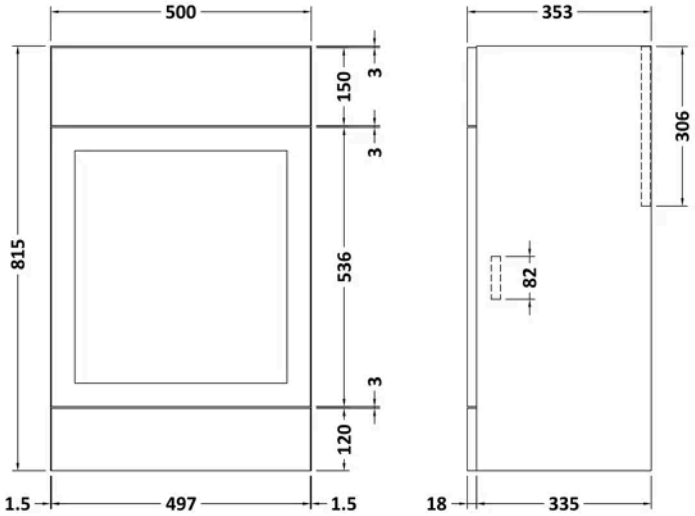

Product Dimensions

Product	815 x 500 x 353mm (H x W x D)
Packaged	860 x 530 x 385mm (H x W x D)
Nett Weight	13.5 kg
Packaged Weight	14 kg

Product Details

Country of Origin	United Kingdom
Product Material	Mfc Smooth Matt
Colour/Finish	Fern Green
Mount Type	Floor
Style	Traditional
Construction Method	Cam & Wood Dowel
Ce Certified	Yes
Construction Type	Rigid
Fascia Finish	Mdf Vinyl Smooth Matt
Fsc Certified	Yes
Material Thickness	18 mm

© ROXOR Group

Sales Code: FFH3163 **Barcode:** 5056817722067 **Brand:** nuie Lux **Description:** nuie lux Fable 300mm Fern Green Floor Standing Tall Unit

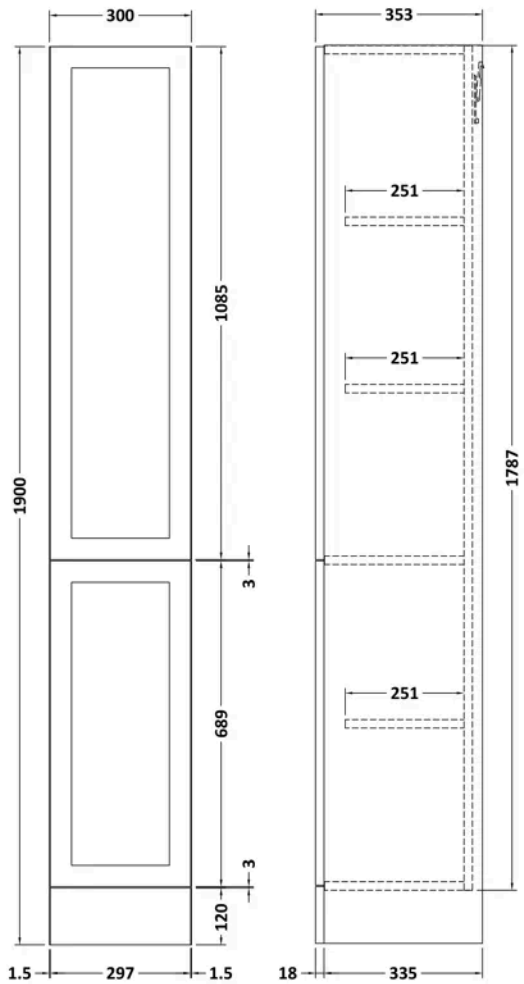

Product Dimensions

Product	1900 x 300 x 353mm (H x W x D)
Packaged	365 x 310 x 1950mm (H x W x D)
Nett Weight	16.5 kg
Packaged Weight	17 kg

Packaging Details

Box Qty	1

Product Details

Country of Origin	United Kingdom
Product Material	Mfc Smooth Matt
Colour/Finish	Fern Green
Mount Type	Floor
Style	Traditional
Construction Method	Cam & Wood Dowel
Ce Certified	Yes
Construction Type	Rigid
Fascia Finish	Mdf Vinyl Smooth Matt
Fsc Certified	Yes
Handles Included	No
Leg Set Included	No
Material Thickness	18 mm
No. Doors	2
No. Shelves	2
Number Of Shelves	2

© ROXOR Group

Sales Code: FFH3182 **Barcode:** 5056817721862 **Brand:** nuie Lux **Description:** nuie lux Fable 300mm Fern Green Floor Standing Base Unit

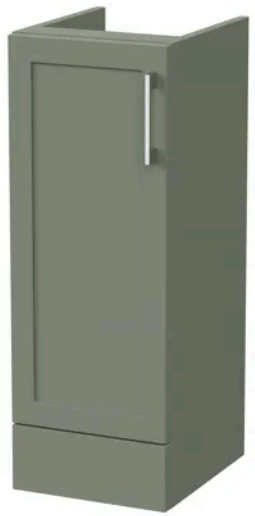

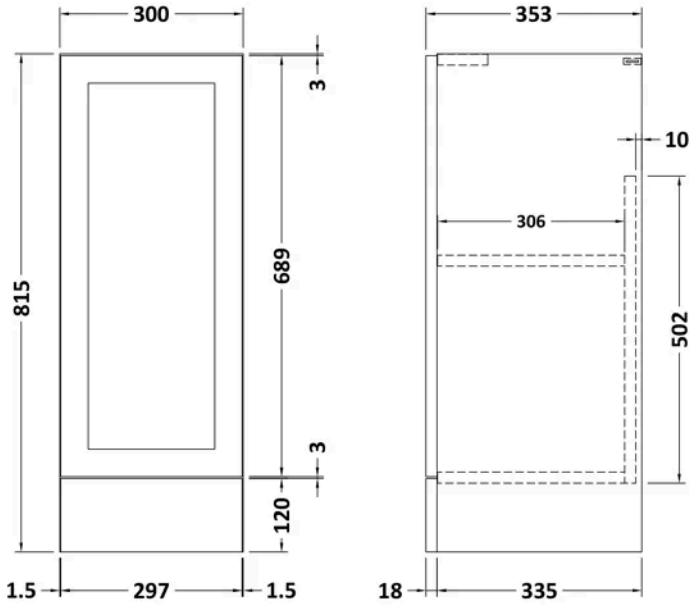

Product Dimensions

Product	815 x 300 x 353mm (H x W x D)
Packaged	900 x 320 x 375mm (H x W x D)
Nett Weight	17.5 kg
Packaged Weight	18 kg

Packaging Details

Box Qty	1

Product Details

Country of Origin	United Kingdom
Product Material	Mfc Smooth Matt
Colour/Finish	Fern Green
Mount Type	Floor
Style	Traditional
Construction Method	Cam & Wood Dowel
Ce Certified	Yes
Construction Type	Rigid
Fascia Finish	Mdf Vinyl Smooth Matt
Fsc Certified	Yes
Handles Included	No
Leg Set Included	No
Material Thickness	18 mm
No. Doors	1
No. Shelves	1
Number Of Shelves	1

© ROXOR Group

Sales Code: H182 **Barcode:** 5056211874867 **Brand:** nuie **Description:** 150mm Chrome D Handle

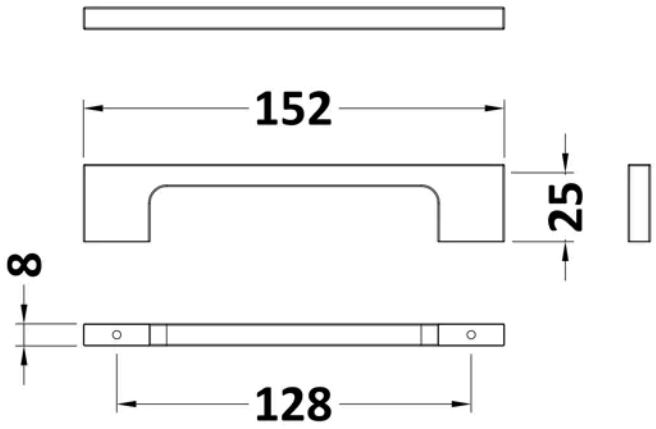

Product Dimensions

Product	150 x 20 x 30mm (H x W x D)
Packaged	20 x 30 x 180mm (H x W x D)
Nett Weight	0.25 kg
Packaged Weight	0.25 kg

Packaging Details

Box Qty	1
Label Size (mm)	50 x 100
Label Colour	White
Label Qty	1.0000

Product Details

Country of Origin	China
Product Material	Brass
Colour/Finish	Chrome
Style	Contemporary
Handle Type	D Shape
Fixings Included	Yes

© ROXOR Group

Sales Code: LX20036CM **Barcode:** 5056817726386 **Brand:** nuie Lux **Description:** nuie lux 2005 x 360mm Carrera Marble Laminate Worktop

Product Dimensions

Product	22 x 2005 x 360mm (H x W x D)
Packaged	20 x 520 x 2010mm (H x W x D)
Nett Weight	10 kg
Packaged Weight	10 kg

Packaging Details

Box Qty	1

Product Details

Country of Origin	United Kingdom
Product Material	Mfc Laminated
Colour/Finish	Carrera Marble
Style	Contemporary

© ROXOR Group

Sales Code: LXBV158 **Barcode:** 5056817725280 **Brand:** nuie Lux **Description:** nuie lux 455mm Ceramic Rectangular Vessel Basin

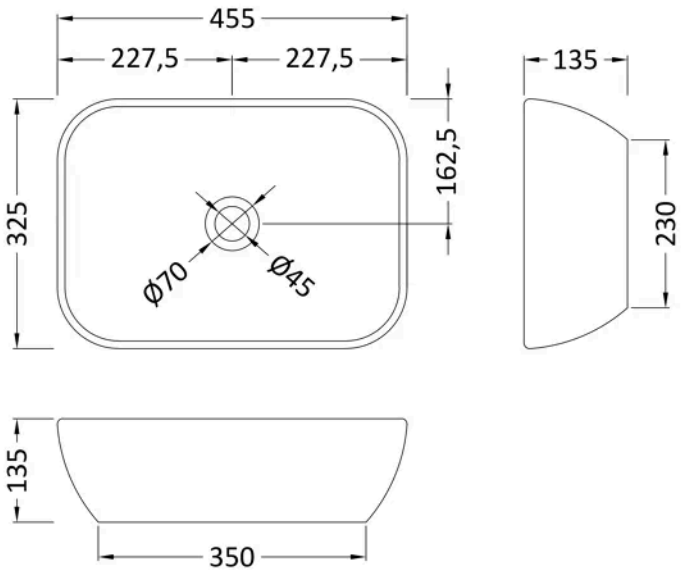

Product Dimensions

Product	135 x 455 x 325mm (H x W x D)
Packaged	155 x 345 x 475mm (H x W x D)
Nett Weight	7.8 kg
Packaged Weight	7.8 kg

Packaging Details

Box Qty	1

Product Details

Country of Origin	China
Product Material	Vitreous China
Colour/Finish	White
Style	Contemporary
Fixings Included	No
Ce Certified	Yes
Inner Bowl Depth	313 mm
Inner Bowl Height	125 mm
Inner Bowl Width	445 mm
No. Of Tapholes	No Tapholes
Number Of Bowls	1
Overflow Cover Included	No
Overflow Included	No
Tap Included	No
Waste Included	No
Waste Size Required	1.5" (70mm flange)

© ROXOR Group