Sales Code: FFHR1814

Barcode: 5056817791292

Brand: nuie Lux

Description: nuie lux Fable 1500mm Autumn Oak 1 Door 2 Drawer Standing Combination Unit With Soft Square Basin

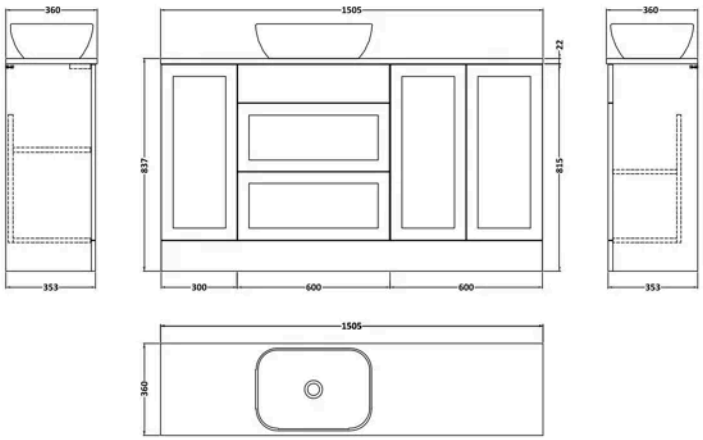

Product Dimensions

Product	837 x 1505 x 360mm (H x W x D)
Packaged	550 x 550 x 550mm (H x W x D)
Nett Weight	93.55 kg
Packaged Weight	93.55 kg

Product Details

Country of Origin	United Kingdom
Product Material	Mfc Laminated,Mfc Textured Woodgrain,Vitreous China
Colour/Finish	Autumn Oak
Mount Type	Floor
Style	Traditional
Fixings Included	Yes
Construction Method	Cam & Wood Dowel
Construction Type	Rigid
Fascia Finish	Mdf Vinyl Textured Woodgrain
Handles Included	Yes
Inner Bowl Depth	313 mm
Inner Bowl Height	125 mm
Inner Bowl Width	445 mm
Material Thickness	18 mm
No. Doors	1
No. Drawers	2
No. Of Tapholes	No Tapholes
No. Shelves	1
Number Of Bowls	1
Number Of Shelves	1

© ROXOR Group

Sales Code: FFH1810 **Barcode:** 5056817715595 **Brand:** nuie Lux **Description:** nuie lux Fable 600mm Autumn Oak Floor Standing Cabinet

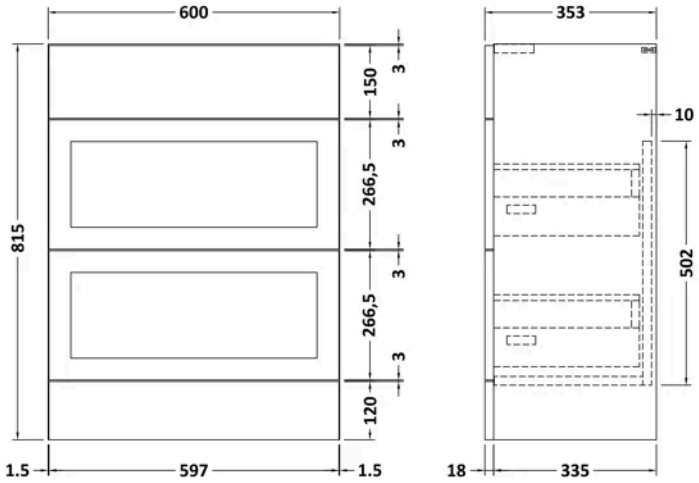

Product Dimensions

Product	815 x 600 x 353mm (H x W x D)
Packaged	860 x 630 x 385mm (H x W x D)
Nett Weight	20 kg
Packaged Weight	20.5 kg

Product Details

Country of Origin	United Kingdom
Product Material	Mfc Textured Woodgrain
Colour/Finish	Autumn Oak
Mount Type	Floor
Style	Traditional
Construction Method	Cam & Wood Dowel
Ce Certified	Yes
Construction Type	Rigid
Drawer Type	80mm High Metal S/C Inc Gallery
Fascia Finish	Mdf Vinyl Textured Woodgrain
Fsc Certified	Yes
Handles Included	No
Leg Set Included	No
Material Thickness	18 mm
No. Drawers	2

© ROXOR Group

Sales Code: FFH1882 **Barcode:** 5056817721886 **Brand:** nuie Lux **Description:** nuie lux Fable 300mm Autumn Oak Floor Standing Base Unit

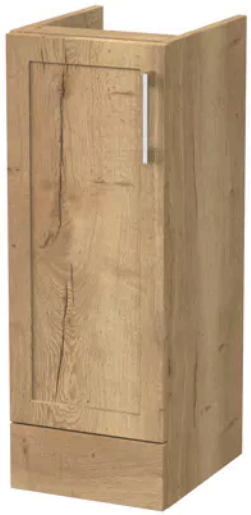

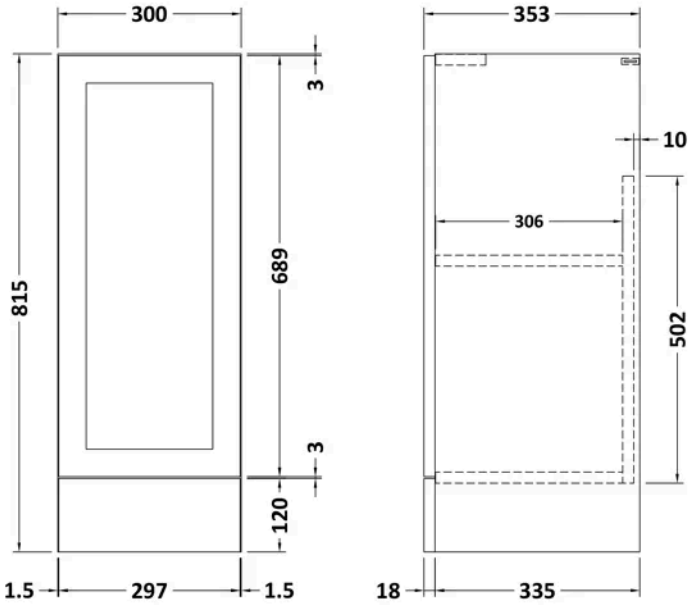

Product Dimensions

Product	815 x 300 x 353mm (H x W x D)
Packaged	900 x 320 x 375mm (H x W x D)
Nett Weight	17.5 kg
Packaged Weight	18 kg

Product Details

Country of Origin	United Kingdom
Product Material	Mfc Textured Woodgrain
Colour/Finish	Autumn Oak
Mount Type	Floor
Style	Traditional
Construction Method	Cam & Wood Dowel
Ce Certified	Yes
Construction Type	Rigid
Fascia Finish	Mdf Vinyl Textured Woodgrain
Fsc Certified	Yes
Handles Included	No
Leg Set Included	No
Material Thickness	18 mm
No. Doors	1
No. Shelves	1
Number Of Shelves	1

© ROXOR Group

Sales Code: H182 **Barcode:** 5056211874867 **Brand:** nuie **Description:** 150mm Chrome D Handle

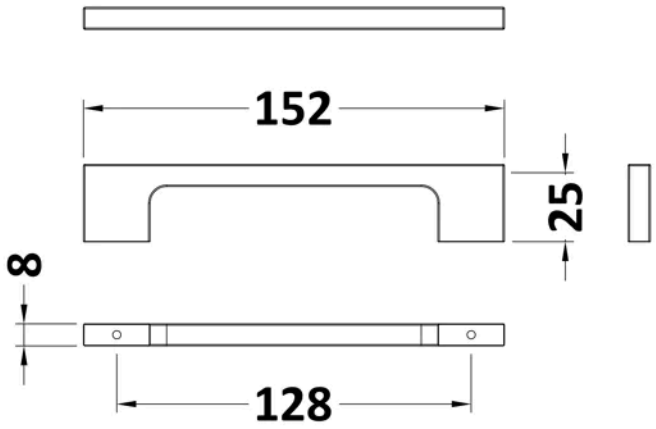

Product Dimensions

Product	150 x 20 x 30mm (H x W x D)
Packaged	20 x 30 x 180mm (H x W x D)
Nett Weight	0.25 kg
Packaged Weight	0.25 kg

Packaging Details

Label Size (mm)	50 x 100
Label Colour	White
Label Qty	1.0000

Product Details

Country of Origin	China
Product Material	Brass
Colour/Finish	Chrome
Style	Contemporary
Handle Type	D Shape
Fixings Included	Yes

© ROXOR Group

Sales Code: LX20036CM **Barcode:** 5056817726386 **Brand:** nuie Lux **Description:** nuie lux 2005 x 360mm Carrera Marble Laminate Worktop

Product Dimensions

Product	22 x 2005 x 360mm (H x W x D)
Packaged	20 x 520 x 2010mm (H x W x D)
Nett Weight	10 kg
Packaged Weight	10 kg

Product Details

Country of Origin	United Kingdom
Product Material	Mfc Laminated
Colour/Finish	Carrera Marble
Style	Contemporary

© ROXOR Group

Sales Code: LXBV258 **Barcode:** 5056817725402 **Brand:** nuie Lux **Description:** nuie lux 455mm Matt White Ceramic Rectangular Vessel Basin

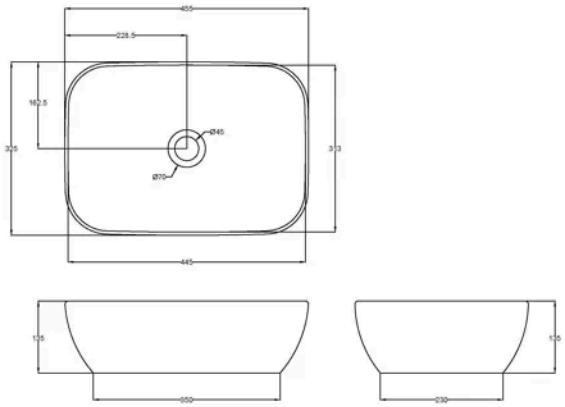

Product Dimensions

Product	135 x 455 x 325mm (H x W x D)
Packaged	155 x 345 x 475mm (H x W x D)
Nett Weight	7.8 kg
Packaged Weight	7.8 kg

Product Details

Country of Origin	China
Product Material	Vitreous China
Colour/Finish	Matt White
Style	Contemporary
Fixings Included	No
Ce Certified	Yes
Inner Bowl Depth	313 mm
Inner Bowl Height	125 mm
Inner Bowl Width	445 mm
No. Of Tapholes	No Tapholes
Number Of Bowls	1
Overflow Cover Included	No
Overflow Included	No
Tap Included	No
Waste Included	No
Waste Size Required	1.5" (70mm flange)

© ROXOR Group