Sales Code: FFH3115 **Barcode:** 5056817716288 **Brand:** nuie Lux **Description:** nuie lux Fable 400mm Fern Green Wall Hung Cabinet



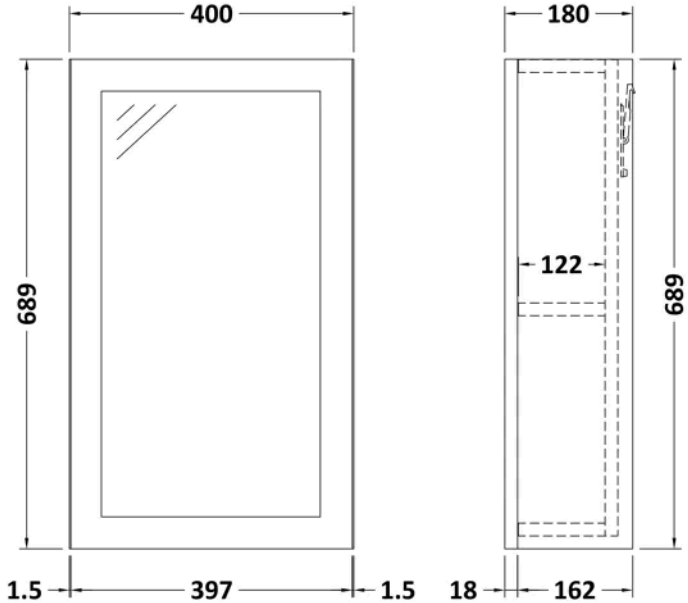

Product Dimensions

Product	689 x 400 x 162mm (H x W x D)
Packaged	202 x 425 x 725mm (H x W x D)
Nett Weight	11.5 kg
Packaged Weight	12 kg

Product Details

Country of Origin	United Kingdom
Product Material	Mfc Smooth Matt
Colour/Finish	Fern Green
Mount Type	Wall Hung
Style	Traditional
Construction Method	Cam & Wood Dowel
Ce Certified	Yes
Construction Type	Rigid
Fascia Finish	Mdf Vinyl Smooth Matt
Fsc Certified	Yes
Handles Included	No
Leg Set Included	No
Material Thickness	18 mm
No. Doors	1
No. Shelves	1
Number Of Shelves	1

© ROXOR Group