**Sales Code:** FFH1415 **Barcode:** 5056817716240 **Brand:** nuie Lux **Description:** nuie lux Fable 400mm Soft Black Wall Hung Cabinet



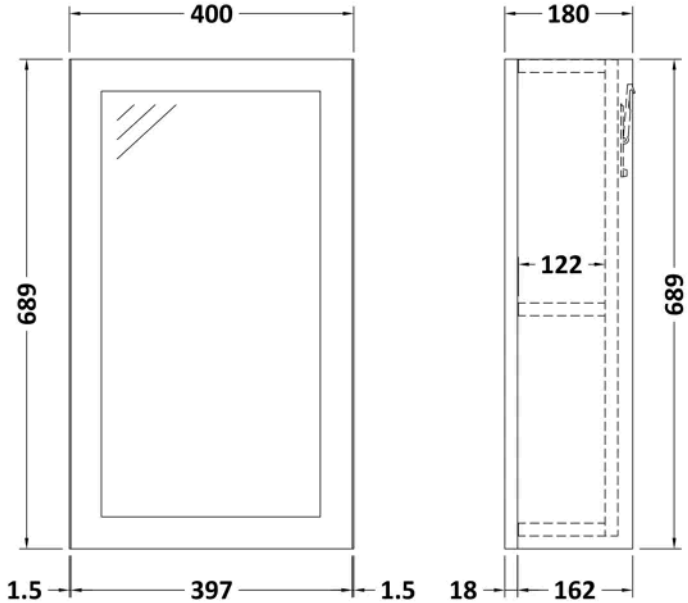


## Product Dimensions

| | |
|---|---|
| Product | 689 x 400 x 162mm (H x W x D) |
| Packaged | 202 x 425 x 725mm (H x W x D) |
| Nett Weight | 11.5 kg |
| Packaged Weight | 12 kg |

## Product Details

| | |
|---|---|
| Country of Origin | United Kingdom |
| Product Material | Mfc Smooth Matt |
| Colour/Finish | Soft Black |
| Mount Type | Wall Hung |
| Style | Traditional |
| Construction Method | Cam & Wood Dowel |
| Ce Certified | Yes |
| Construction Type | Rigid |
| Fascia Finish | Mdf Vinyl Smooth Matt |
| Fsc Certified | Yes |
| Handles Included | No |
| Leg Set Included | No |
| Material Thickness | 18 mm |
| No. Doors | 1 |
| No. Shelves | 1 |
| Number Of Shelves | 1 |

© ROXOR Group