Sales Code: FFB532 **Barcode:** 5056678462522 **Brand:** BC Designs **Description:** BC Designs 500mm 3 Tap Hole Traditional Fireclay Basin



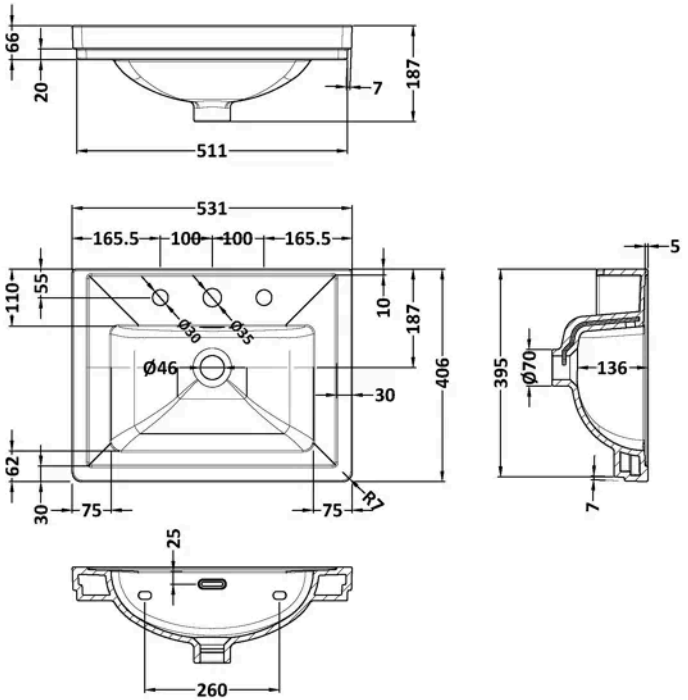

Product Dimensions

Product	187 x 531 x 406mm (H x W x D)
Packaged	430 x 550 x 220mm (H x W x D)
Nett Weight	13.5 kg
Packaged Weight	13.5 kg

Packaging Details

Box Qty	1

Product Details

Country of Origin	United Arab Emirates
Product Material	Fireclay
Colour/Finish	White
Style	Traditional
Bottle Trap Included	No
Ce Certified	Yes
Inner Bowl Depth	234 mm
Inner Bowl Height	136 mm
Inner Bowl Width	531 mm
No. Of Tapholes	3
Number Of Bowls	1
Waste Included	No

© ROXOR Group