Sales Code: FFAR121R

Barcode: 5064007080194

Brand: nuie Lux

Description: nuie lux Loave 1000mm Matt White Right-Hand Fitted Vanity & WC Combination Unit with L-Shaped Polymarble Basin

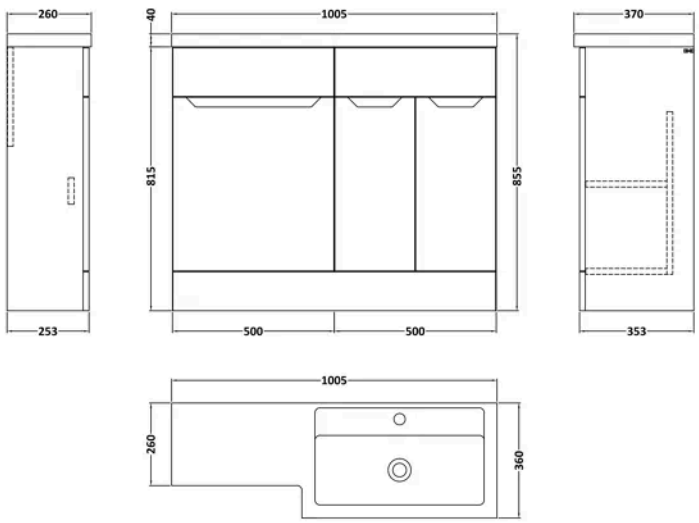

Product Dimensions

Product	815 x 1000 x 355mm (H x W x D)
Packaged	550 x 550 x 550mm (H x W x D)
Nett Weight	47.5 kg
Packaged Weight	48.5 kg

Product Details

Country of Origin	United Kingdom
Product Material	Mfc Smooth Matt,Polymarble
Colour/Finish	Matt White
Mount Type	Floor
Style	Contemporary
Handle Type	Handleless
Fixings Included	Yes
Construction Method	Cam & Wood Dowel
Construction Type	Rigid
Drawer Type	80mm High Metal S/C Inc Gallery
Fascia Finish	Mdf Vinyl Smooth Matt
Handles Included	No
Material Thickness	18 mm
No. Doors	2
No. Of Tapholes	1
Number Of Bowls	1
Overflow Included	Yes
Tap Included	No

© ROXOR Group

Sales Code: FFA106 **Barcode:** 5056817739683 **Brand:** nuie Lux **Description:** nuie lux Loave 500mm Matt White Floor Standing Vanity Unit 353mm Deep

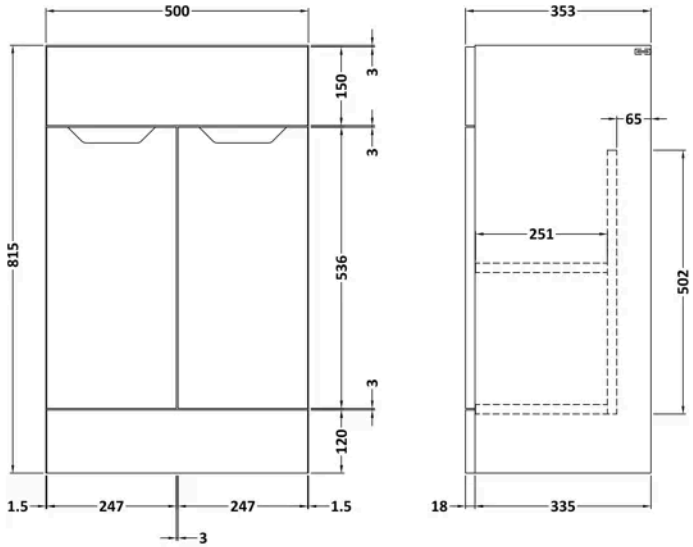

Product Dimensions

Product	815 x 500 x 353mm (H x W x D)
Packaged	375 x 520 x 900mm (H x W x D)
Nett Weight	21.5 kg
Packaged Weight	22 kg

Packaging Details

Box Qty	1

Product Details

Country of Origin	United Kingdom
Product Material	Mfc Smooth Matt
Colour/Finish	Matt White
Mount Type	Floor
Style	Contemporary
Construction Method	Cam & Wood Dowel
Ce Certified	Yes
Construction Type	Rigid
Fascia Finish	Mdf Vinyl Smooth Matt
Fsc Certified	Yes
Handles Included	No
Material Thickness	18 mm
No. Doors	2
No. Shelves	1
Number Of Shelves	1
Waste Shroud	No

© ROXOR Group

Sales Code: FFA145 **Barcode:** 5056817739379 **Brand:** nuie Lux **Description:** nuie lux Loave 500mm Matt White 253mm Deep Floor Standing WC Unit

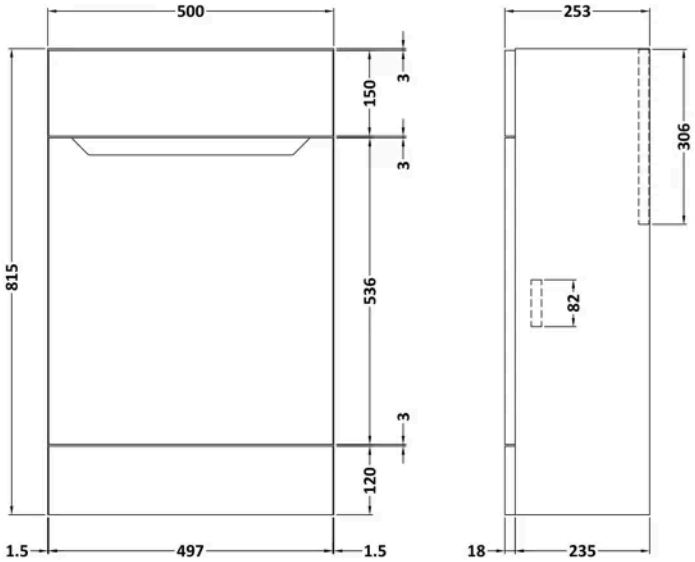

Product Dimensions

Product	815 x 500 x 253mm (H x W x D)
Packaged	860 x 530 x 300mm (H x W x D)
Nett Weight	11 kg
Packaged Weight	11.5 kg

Packaging Details

Box Qty	1

Product Details

Country of Origin	United Kingdom
Product Material	Mfc Smooth Matt
Colour/Finish	Matt White
Mount Type	Floor
Style	Contemporary
Construction Method	Cam & Wood Dowel
Ce Certified	Yes
Construction Type	Rigid
Fascia Finish	Mdf Vinyl Smooth Matt
Fsc Certified	Yes
Material Thickness	18 mm

© ROXOR Group

Sales Code: LXPB412R **Barcode:** 5056817724757 **Brand:** nuie Lux **Description:** nuie lux 1000mm 1 Tap Hole Right Hand Polymarble Basin

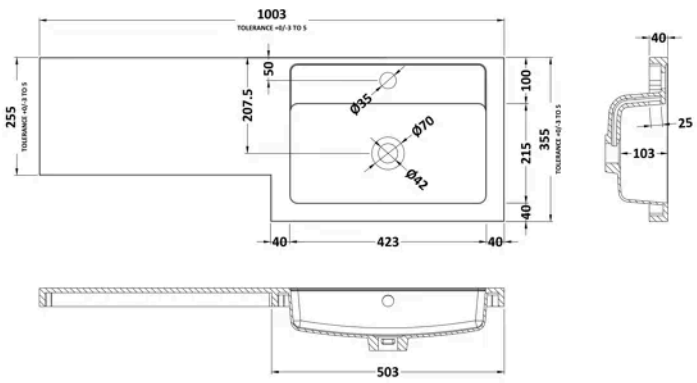

Product Dimensions

Product	135 x 1003 x 355mm (H x W x D)
Packaged	190 x 420 x 1060mm (H x W x D)
Nett Weight	15 kg
Packaged Weight	15 kg

Packaging Details

Box Qty	1

Product Details

Country of Origin	China
Product Material	Polymarble
Colour/Finish	White
Style	Contemporary
Ce Certified	Yes
Inner Bowl Height	103 mm
No. Of Tapholes	1
Number Of Bowls	1
Overflow Included	Yes
Tap Included	No
Waste Included	No

© ROXOR Group