Sales Code: ESK3TR02 **Barcode:** 5056817759346 **Brand:** nuie Lux **Description:** nuie lux Esker Chrome Triple Thermostatic Shower Valve



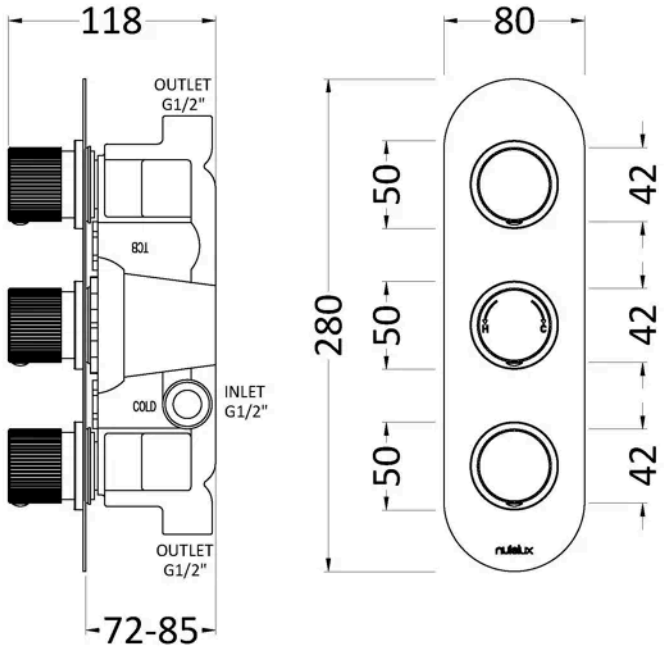

Product Dimensions

Product	280 x 80 x 136mm (H x W x D)
Packaged	110 x 250 x 320mm (H x W x D)
Nett Weight	3.45 kg
Packaged Weight	3.45 kg

Packaging Details

Label Size (mm)	50 x 100
Label Colour	White
Label Qty	1.0000

Product Details

Country of Origin	China
Product Material	Brass Abs
Control Type	Manual
WRAS Approved	Yes
Valve/Cartridge Type	1/4 Turn
Colour/Finish	Chrome
Mount Type	Recessed/Wall
Style	Contemporary
Handle Type	Knob
TMV2 Approved	No
TMV3 Approved	No
Pipe Size	15 mm & 22 mm
Handset Included	No
Head Included	No
Min Operating Pressure	0.1 Bar
No. Outlets	2.0000
Outlet Elbow Supplied	No
Valve / Cartridge Type	1/4 Turn
Wras Approval No	2204707

© ROXOR Group