Sales Code: ESK315 **Barcode:** 5056817753986 **Brand:** nuie Lux **Description:** nuie lux Esker Chrome Mini Mono Basin Mixer With Push Button Waste



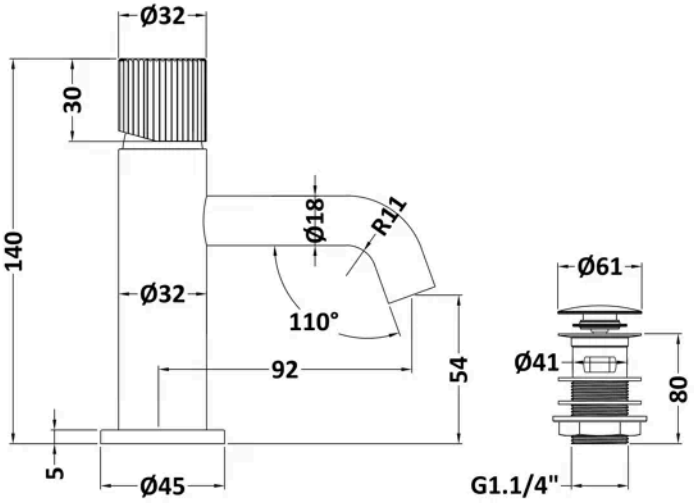

Product Dimensions

Product	140 x 45 x 125mm (H x W x D)
Packaged	95 x 225 x 275mm (H x W x D)
Nett Weight	1.29 kg
Packaged Weight	1.29 kg

Packaging Details

Label Size (mm)	50 x 100
Label Colour	White
Label Qty	1.0000

Product Details

Country of Origin	China
Product Material	Brass,Plastic
Control Type	Manual
Waste Type	Push Button
WRAS Approved	No
Valve/Cartridge Type	Single Lever Cartridge
Colour/Finish	Chrome
Mount Type	Deck
Style	Contemporary
Handle Type	Lever/Round
TMV2 Approved	No
TMV3 Approved	No
Pipe Size	1/2"
Min Operating Pressure	0.2 Bar
Tap Spout Height	85 mm
Tap Spout Projection	90 mm
Tap Tails Included	Yes
Valve / Cartridge Type	Single Lever Cartridge
Waste Included	Yes

© ROXOR Group