Sales Code: ENZW162 **Barcode:** 5056678427262 **Brand:** nuie **Description:** nuie 1700mm x 800mm Matt Black Wetroom Screen With Return Screen And Slate Grey Tray

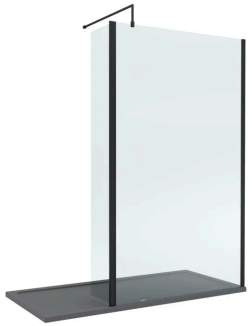

Technical Drawing Not Available

Product Dimensions

Product	1950 x 1200 x 14mm (H x W x D)
Packaged	550 x 550 x 550mm (H x W x D)
Nett Weight	117.98 kg
Packaged Weight	118.48 kg

Packaging Details

Box Qty	5

Product Details

Country of Origin	China
Product Material	Acrylic Capped Abs Caco3 And Pu,Aluminium,Glass
Colour/Finish	Matt Black
Style	Contemporary
Ce Certified	Yes
Enclosure Design	Framed
Glass Thickness	8 mm
Waste Included	No

© ROXOR Group

Sales Code: FIX024 **Barcode:** 5056211847342 **Brand:** Hudson Reed **Description:** Matt Black Wetroom Screen Support Arm

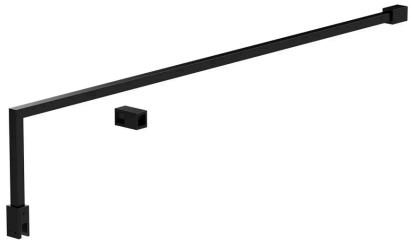

Product Dimensions

Product	15 x 150 x 1000mm (H x W x D)
Packaged	35 x 160 x 1020mm (H x W x D)
Nett Weight	0.67 kg
Packaged Weight	0.7 kg

Packaging Details

Box Qty	1

Product Details

Country of Origin	China
Product Material	Stainless Steel
Colour/Finish	Matt Black
Style	Contemporary

© ROXOR Group

Sales Code: TR71063 **Barcode:** 5056211813330 **Brand:** nuie **Description:** 1700 x 800mm Slate Grey Slimline Rectangular Shower Tray

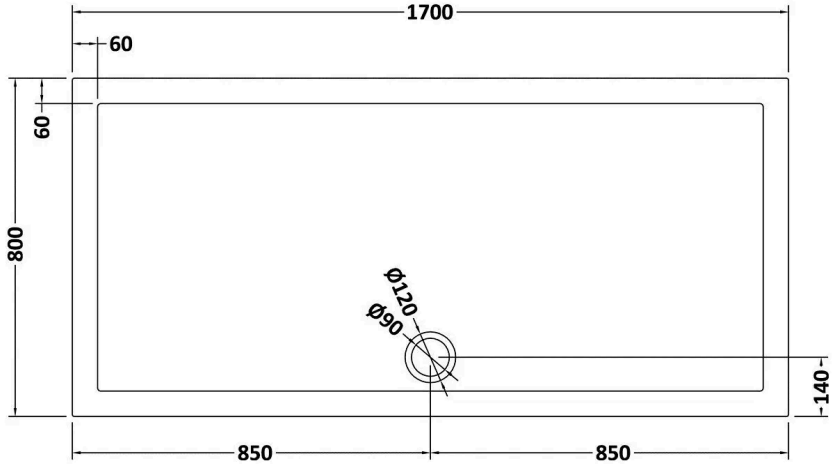

Product Dimensions

Product	40 x 800 x 1700mm (H x W x L)
Packaged	85 x 840 x 1740mm (H x W x D)
Nett Weight	48.5 kg
Packaged Weight	48.8 kg

Packaging Details

Box Qty	1

Product Details

Country of Origin	United Kingdom
Product Material	Acrylic Capped Abs Caco3 And Pu
Colour/Finish	Grey Slate
Style	Contemporary
Ce Certified	Yes
Leg Set Included	No
Raised Edge	Yes
Slip Resistant	No
Waste Included	No
Waste Size Required	90mm

© ROXOR Group

Sales Code: WRSB1200G **Barcode:** 5056462620770 **Brand:** OEM **Description:** Missing title

Product Image Not Available

Technical Drawing Not Available

Product Dimensions

Product	1950 x 1200 x 8mm (H x W x D)
Packaged	2070 x 1250 x 60mm (H x W x D)
Nett Weight	53.2 kg
Packaged Weight	53.2 kg

Packaging Details

Box Qty	1

Product Details

Country of Origin	China
Colour/Finish	Clear
Easy Clean	No
Ce Certified	Yes
Easy Fit	No
Enclosure Design	Frameless
Glass Thickness	8 mm

© ROXOR Group

Sales Code: WRSBP30HC **Barcode:** 5056678429839 **Brand:** Hudson Reed **Description:** Hudson Reed 300mm Matt Black Wetroom Flipper Screen

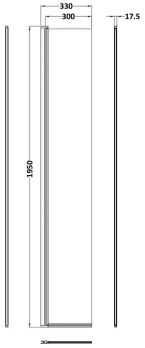

Product Dimensions

Product	1950 x 322 x 27mm (H x W x D)
Packaged	55 x 400 x 2010mm (H x W x D)
Nett Weight	15.1 kg
Packaged Weight	15.1 kg

Packaging Details

Box Qty	1
Label Size (mm)	50 x 100
Label Colour	White
Label Qty	2.0000

Product Details

Country of Origin	China
Product Material	Aluminium
Colour/Finish	Matt Black
Style	Contemporary
Fixings Included	Yes
Easy Clean	Yes
Adjustment Max	300
Adjustment Min	300
Ce Certified	Yes
Declaration Of Performance	No
Easy Fit	No
Enclosure Design	Semi-Frameless
Frame Finish	Matt Black
Glass Thickness	8 mm
Handles Included	No
Support Bar Included	No
Ukca Certified	No

© ROXOR Group

Sales Code: WRSF004 **Barcode:** 5056211807643 **Brand:** Hudson Reed **Description:** Matt Black 1950mm Wetroom Wall Channel

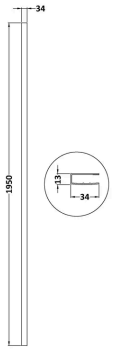

Product Dimensions

Product	1950 x 34 x 13mm (H x W x D)
Packaged	400 x 50 x 1970mm (H x W x D)
Nett Weight	1.01 kg
Packaged Weight	1.42 kg

Packaging Details

Box Qty	1

Product Details

Country of Origin	China
Product Material	Aluminium
Colour/Finish	Matt Black
Style	Contemporary

© ROXOR Group