Sales Code: ENZW133

Barcode: 5056678427552

Brand: nuie

Description: nuie 1200mm x 800mm Brushed Brass Wetroom Screen with Return Screen And Slate Grey Tray

Technical Drawing Not Available

Product Dimensions

Product	1950 x 700 x 14mm (H x W x D)
Packaged	550 x 550 x 550mm (H x W x D)
Nett Weight	78.57 kg
Packaged Weight	79.07 kg

Packaging Details

Box Qty	5

Product Details

Country of Origin	China
Product Material	Acrylic Capped Abs Caco3 And Pu,Aluminium,Glass
Colour/Finish	Brushed Brass
Style	Contemporary
Ce Certified	Yes
Enclosure Design	Framed
Glass Thickness	8 mm
Waste Included	No

© ROXOR Group

Sales Code: FIX025 **Barcode:** 5056462611884 **Brand:** nuie **Description:** Brushed Brass Wetroom Screen Support Arm

Product Dimensions

Product	15 x 150 x 1000mm (H x W x D)
Packaged	35 x 160 x 1020mm (H x W x D)
Nett Weight	0.67 kg
Packaged Weight	0.7 kg

Packaging Details

Box Qty	1

Product Details

Country of Origin	China
Product Material	Stainless Steel
Colour/Finish	Brushed Brass
Style	Contemporary

© ROXOR Group

Sales Code: TR71023 **Barcode:** 5056211813231 **Brand:** nuie **Description:** 1200 x 800mm Slate Grey Slimline Rectangular Shower Tray

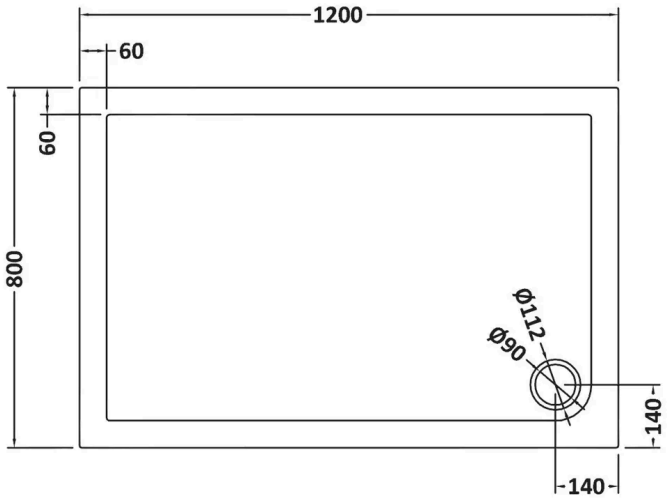

Product Dimensions

Product	40 x 800 x 1200mm (H x W x L)
Packaged	85 x 840 x 1240mm (H x W x D)
Nett Weight	31.4 kg
Packaged Weight	31.7 kg

Packaging Details

Box Qty	1

Product Details

Country of Origin	United Kingdom
Product Material	Acrylic Capped Abs Caco3 And Pu
Colour/Finish	Grey Slate
Style	Contemporary
Ce Certified	Yes
Leg Set Included	No
Raised Edge	Yes
Slip Resistant	No
Waste Included	No
Waste Size Required	90mm

© ROXOR Group

Sales Code: WRSB700G **Barcode:** 5056462620718 **Brand:** OEM **Description:** Glass Only 700 x 1950 x 8mm

Product Image Not Available

Technical Drawing Not Available

Product Dimensions

Product	1950 x 700 x 8mm (H x W x D)
Packaged	2070 x 750 x 60mm (H x W x D)
Nett Weight	31.1 kg
Packaged Weight	31.1 kg

Packaging Details

Box Qty	1

Product Details

Country of Origin	China
Colour/Finish	Clear
Easy Clean	No
Ce Certified	Yes
Easy Fit	No
Enclosure Design	Frameless
Glass Thickness	8 mm

© ROXOR Group

Sales Code: WRSBB30HC **Barcode:** 5056678429846 **Brand:** Hudson Reed **Description:** Hudson Reed 300mm Brushed Brass Wetroom Flipper Screen

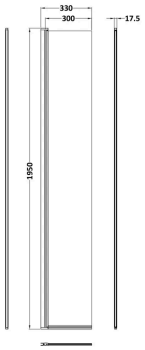

Product Dimensions

Product	1950 x 322 x 27mm (H x W x D)
Packaged	55 x 400 x 2010mm (H x W x D)
Nett Weight	15.1 kg
Packaged Weight	15.1 kg

Packaging Details

Box Qty	1
Label Size (mm)	50 x 100
Label Colour	White
Label Qty	2.0000

Product Details

Country of Origin	China
Product Material	Aluminium
Colour/Finish	Brushed Brass
Style	Contemporary
Fixings Included	Yes
Easy Clean	Yes
Adjustment Max	300
Adjustment Min	300
Ce Certified	Yes
Declaration Of Performance	No
Easy Fit	No
Enclosure Design	Semi-Frameless
Frame Finish	Brushed Brass
Glass Thickness	8 mm
Handles Included	No
Support Bar Included	No
Ukca Certified	No

© ROXOR Group

Sales Code: WRSF015 **Barcode:** 5056462611860 **Brand:** Hudson Reed **Description:** Brushed Brass 1950mm Wetroom Wall Channel

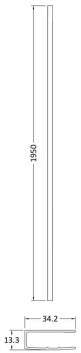

Product Dimensions

Product	1950 x 34 x 13mm (H x W x D)
Packaged	400 x 50 x 1970mm (H x W x D)
Nett Weight	0.8 kg
Packaged Weight	0.8 kg

Packaging Details

Box Qty	1

Product Details

Country of Origin	China
Product Material	Aluminium
Colour/Finish	Brass
Style	Contemporary

© ROXOR Group