Sales Code: ENZW079 **Barcode:** 5056678428092 **Brand:** nuie **Description:** nuie 1700mm x 800mm Brushed Brass Walk-in Wetroom Screens With Slate Grey Tray

Technical Drawing Not Available

Product Dimensions

Product	1950 x 1200 x 14mm (H x W x D)
Packaged	550 x 550 x 550mm (H x W x D)
Nett Weight	140.04 kg
Packaged Weight	140.54 kg

Packaging Details

Box Qty	7

Product Details

Country of Origin	China
Product Material	Acrylic Capped Abs Caco3 And Pu,Aluminium,Glass
Colour/Finish	Brushed Brass
Style	Contemporary
Ce Certified	Yes
Enclosure Design	Frameless
Glass Thickness	8 mm
Waste Included	No

© ROXOR Group

Sales Code: FIX025 **Barcode:** 5056462611884 **Brand:** nuie **Description:** Brushed Brass Wetroom Screen Support Arm

Product Dimensions

Product	15 x 150 x 1000mm (H x W x D)
Packaged	35 x 160 x 1020mm (H x W x D)
Nett Weight	0.67 kg
Packaged Weight	0.7 kg

Packaging Details

Box Qty	1

Product Details

Country of Origin	China
Product Material	Stainless Steel
Colour/Finish	Brushed Brass
Style	Contemporary

© ROXOR Group

Sales Code: TR71063 **Barcode:** 5056211813330 **Brand:** nuie **Description:** 1700 x 800mm Slate Grey Slimline Rectangular Shower Tray

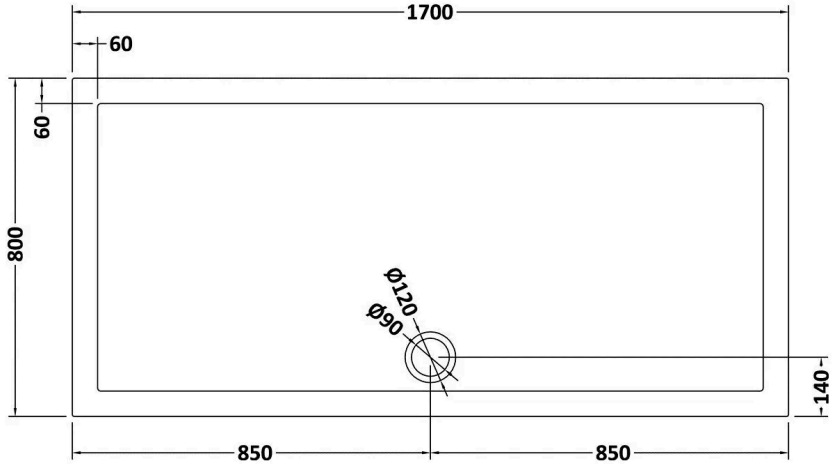

Product Dimensions

Product	40 x 800 x 1700mm (H x W x L)
Packaged	85 x 840 x 1740mm (H x W x D)
Nett Weight	48.5 kg
Packaged Weight	48.8 kg

Packaging Details

Box Qty	1

Product Details

Country of Origin	United Kingdom
Product Material	Acrylic Capped Abs Caco3 And Pu
Colour/Finish	Grey Slate
Style	Contemporary
Ce Certified	Yes
Leg Set Included	No
Raised Edge	Yes
Slip Resistant	No
Waste Included	No
Waste Size Required	90mm

© ROXOR Group

Sales Code: WRSB1200G **Barcode:** 5056462620770 **Brand:** OEM **Description:** Missing title

Product Image Not Available

Technical Drawing Not Available

Product Dimensions

Product	1950 x 1200 x 8mm (H x W x D)
Packaged	2070 x 1250 x 60mm (H x W x D)
Nett Weight	53.2 kg
Packaged Weight	53.2 kg

Packaging Details

Box Qty	1

Product Details

Country of Origin	China
Colour/Finish	Clear
Easy Clean	No
Ce Certified	Yes
Easy Fit	No
Enclosure Design	Frameless
Glass Thickness	8 mm

© ROXOR Group

Sales Code: WRSB800G **Barcode:** 5056462620732 **Brand:** OEM **Description:** Missing title

Product Image Not Available

Technical Drawing Not Available

Product Dimensions

Product	1950 x 800 x 8mm (H x W x D)
Packaged	2070 x 850 x 60mm (H x W x D)
Nett Weight	35.9 kg
Packaged Weight	35.9 kg

Packaging Details

Box Qty	1

Product Details

Country of Origin	China
Colour/Finish	Clear
Easy Clean	No
Ce Certified	Yes
Easy Fit	No
Enclosure Design	Frameless
Glass Thickness	8 mm

© ROXOR Group

Sales Code: WRSF015 **Barcode:** 5056462611860 **Brand:** Hudson Reed **Description:** Brushed Brass 1950mm Wetroom Wall Channel

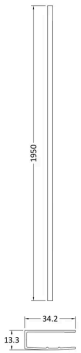

Product Dimensions

Product	1950 x 34 x 13mm (H x W x D)
Packaged	400 x 50 x 1970mm (H x W x D)
Nett Weight	0.8 kg
Packaged Weight	0.8 kg

Packaging Details

Box Qty	1

Product Details

Country of Origin	China
Product Material	Aluminium
Colour/Finish	Brass
Style	Contemporary

© ROXOR Group