**Sales Code:** ENZRE036

**Barcode:** 5056678409749

**Brand:** nuie

**Description:** nuie Rene 1200mm x 800mm Matt Black Right Hand Offset Quadrant Shower Enclosure With White Tray, Waste and Round Thermostatic Shower Kit



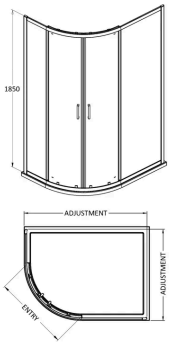


## Product Dimensions

| | |
|---|---|
| Product | 1850 x 1180 x 780mm (H x W x D) |
| Packaged | 550 x 550 x 550mm (H x W x D) |
| Nett Weight | 78.49 kg |
| Packaged Weight | 78.99 kg |

## Packaging Details

| | |
|---|---|
| Box Qty | 4 |

## Product Details

| | |
|---|---|
| Country of Origin | China |
| Product Material | Acrylic Capped Abs Caco3 And Pu,Aluminium,Glass |
| Colour/Finish | Black |
| Style | Contemporary |
| Ce Certified | Yes |
| Enclosure Design | Framed |
| Frame Finish | Matt Black |
| Glass Thickness | 6 mm |
| Waste Included | Yes |

© ROXOR Group

**Sales Code:** JTY475 **Barcode:** 5056211897774 **Brand:** nuie **Description:** nuie Matt Black Thermostatic Bar Dual Shower Valve Shower Kit



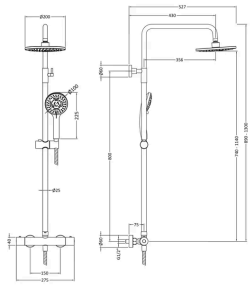

## Product Dimensions

| | |
|---|---|
| Product | 1245 x 267 x 429mm (H x W x D) |
| Packaged | 85 x 410 x 880mm (H x W x D) |
| Outer Box | 570 x 780 x 450mm (H x W x D) |
| Nett Weight | 4.28 kg |
| Packaged Weight | 4.75 kg |

## Packaging Details

| | |
|---|---|
| Box Qty | 1 |
| Label Size (mm) | 50 x 100 |
| Label Colour | White |
| Label Qty | 2.0000 |

## Product Details

| | |
|---|---|
| Country of Origin | China |
| Product Material | Brass Abs |
| Control Type | Manual |
| WRAS Approved | Yes |
| Valve/Cartridge Type | 1/4 Turn |
| Colour/Finish | Matt Black |
| Mount Type | Surface/Wall |
| Style | Contemporary |
| Handle Type | Round |
| Easy Clean | Yes |
| TMV2 Approved | Yes |
| TMV3 Approved | No |
| Pipe Centres | 150 |
| Handset Included | Yes |
| Head Included | Yes |
| Hose Included | Yes |
| Hose Length | 1500 mm |
| Min Operating Pressure | 1 Bar |
| No. Outlets | 2.0000 |
| Outlet Elbow Supplied | No |
| Tmv2 Approval Number | 2503071 |
| Valve / Cartridge Type | 1/4 Turn |
| Wras Approval No | 2307019 |

© ROXOR Group

**Sales Code:** NTP113 **Barcode:** 5055369006168 **Brand:** nuie **Description:** 1200 x 800mm White Slimline Right Hand Offset Quadrant Shower Tray



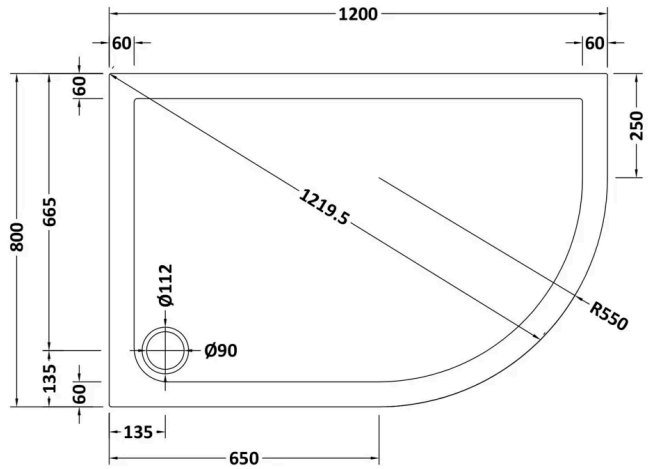


## Product Dimensions

| | |
|---|---|
| Product | 40 x 800 x 1200mm (H x W x L) |
| Packaged | 80 x 840 x 1240mm (H x W x D) |
| Nett Weight | 27.6 kg |
| Packaged Weight | 27.9 kg |

## Packaging Details

| | |
|---|---|
| Box Qty | 1 |

## Product Details

| | |
|---|---|
| Country of Origin | United Kingdom |
| Product Material | Acrylic Capped Abs Caco3 And Pu |
| Colour/Finish | White |
| Style | Contemporary |
| Ce Certified | Yes |
| Leg Set Included | No |
| Raised Edge | Yes |
| Slip Resistant | No |
| Waste Included | No |
| Waste Size Required | 90mm |

© ROXOR Group

**Sales Code:** SQU128BP **Barcode:** 5056462643496 **Brand:** nuie **Description:** Nuie Rene 1180mm Framed Matt Black Offset Quadrant Shower Enclosure



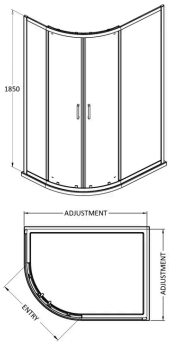


## Product Dimensions

| | |
|---|---|
| Product | 1850 x 1180 x 780mm (H x W x D) |
| Packaged | 1910 x 635 x 110mm (H x W x D) |
| Nett Weight | 46.8 kg |
| Packaged Weight | 48.8 kg |

## Packaging Details

| | |
|---|---|
| Box Qty | 1 |
| Label Size (mm) | 50 x 100 |

## Product Details

| | |
|---|---|
| Country of Origin | China |
| Product Material | Abs,Aluminium |
| Colour/Finish | Matt Black |
| Style | Contemporary |
| Handle Type | Square T Shape |
| Fixings Included | Yes |
| Easy Clean | No |
| Adjustment Max | 1175/1195 |
| Adjustment Min | 775/795 |
| Ce Certified | Yes |
| Declaration Of Performance | Yes |
| Easy Fit | Yes |
| Enclosure Design | Framed |
| Entry Width | 480 mm |
| Frame Finish | Matt Black |
| Glass Thickness | 6 mm |
| Handles Included | Yes |
| No. Doors | 2 |
| Radius | 538 mm |
| Support Bar Included | No |
| Ukca Certified | No |
| Wheel Type | Dual Quick Release |

© ROXOR Group

**Sales Code:** STW002 **Barcode:** 5056211884576 **Brand:** nuie **Description:** Matt Black 90mm Fast Flow Shower Tray Waste



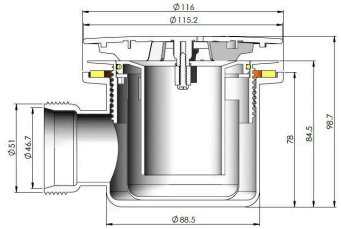


## Product Dimensions

| | |
|---|---|
| Product | 99 x 116 x 116mm (H x W x D) |
| Packaged | 100 x 140 x 170mm (H x W x D) |
| Nett Weight | 0.31 kg |
| Packaged Weight | 0.37 kg |

## Packaging Details

| | |
|---|---|
| Box Qty | 1 |

## Product Details

| | |
|---|---|
| Country of Origin | United Kingdom |
| Product Material | Polypropylene |
| Waste Type | Fast Flow |
| Colour/Finish | Matt Black |
| Style | Contemporary |
| Waste Shape | Round |

© ROXOR Group