Sales Code: ENZRE033

Barcode: 5056678409718

Brand: nuie

Description: nuie Rene 1200mm x 800mm Matt Black Left Hand Offset Quadrant Shower Enclosure With White Tray, Waste and Square Thermostatic Shower Kit



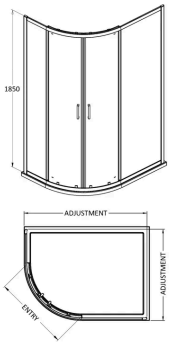

Product Dimensions

Product	1850 x 1180 x 780mm (H x W x D)
Packaged	550 x 550 x 550mm (H x W x D)
Nett Weight	77.86 kg
Packaged Weight	78.36 kg

Packaging Details

Box Qty	4

Product Details

Country of Origin	China
Product Material	Acrylic Capped Abs Caco3 And Pu,Aluminium,Glass
Colour/Finish	Black
Style	Contemporary
Ce Certified	Yes
Enclosure Design	Framed
Frame Finish	Matt Black
Glass Thickness	6 mm
Waste Included	Yes

© ROXOR Group

Sales Code: JTY486 **Barcode:** 5056211897781 **Brand:** nuie **Description:** nuie Matt Black Thermostatic Bar Dual Shower Valve Shower Kit



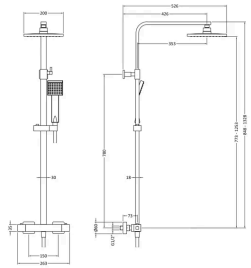

Product Dimensions

Product	1200 x 200 x 465mm (H x W x D)
Packaged	85 x 405 x 845mm (H x W x D)
Nett Weight	4.75 kg
Packaged Weight	4.88 kg

Packaging Details

Box Qty	1
Label Size (mm)	50 x 100
Label Colour	White
Label Qty	2.0000

Product Details

Country of Origin	China
Product Material	Brass Abs
Control Type	Manual
WRAS Approved	Yes
Valve/Cartridge Type	1/4 Turn
Colour/Finish	Matt Black
Mount Type	Surface/Wall
Style	Contemporary
Handle Type	Square
Easy Clean	Yes
TMV2 Approved	Yes
TMV3 Approved	No
Pipe Centres	150
Handset Included	Yes
Head Included	Yes
Hose Included	Yes
Hose Length	1500 mm
Min Operating Pressure	1 Bar
No. Outlets	2.0000
Outlet Elbow Supplied	No
Tmv2 Approval Number	2310177
Valve / Cartridge Type	1/4 Turn
Wras Approval No	2307019

© ROXOR Group

Sales Code: NTP112 **Barcode:** 5055369006151 **Brand:** nuie **Description:** 1200 x 800mm White Slimline Left Hand Offset Quadrant Shower Tray



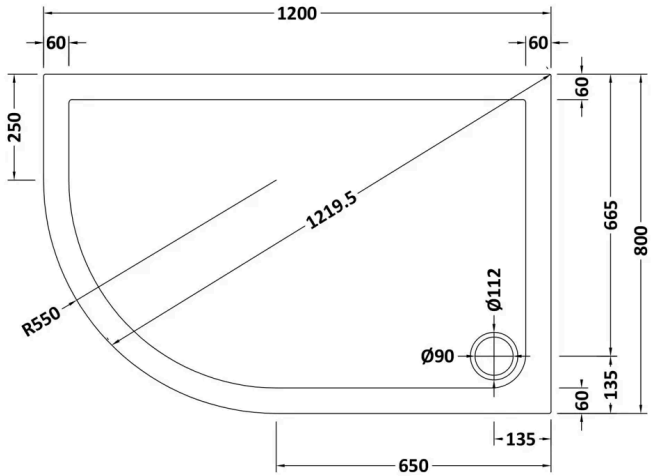

Product Dimensions

Product	40 x 800 x 1200mm (H x W x L)
Packaged	80 x 840 x 1240mm (H x W x D)
Nett Weight	26.5 kg
Packaged Weight	26.8 kg

Packaging Details

Box Qty	1

Product Details

Country of Origin	United Kingdom
Product Material	Acrylic Capped Abs Caco3 And Pu
Colour/Finish	White
Style	Contemporary
Ce Certified	Yes
Leg Set Included	No
Raised Edge	Yes
Slip Resistant	No
Waste Included	No
Waste Size Required	90mm

© ROXOR Group

Sales Code: SQU128BP **Barcode:** 5056462643496 **Brand:** nuie **Description:** Nuie Rene 1180mm Framed Matt Black Offset Quadrant Shower Enclosure



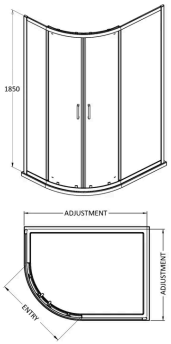

Product Dimensions

Product	1850 x 1180 x 780mm (H x W x D)
Packaged	1910 x 635 x 110mm (H x W x D)
Nett Weight	46.8 kg
Packaged Weight	48.8 kg

Packaging Details

Box Qty	1
Label Size (mm)	50 x 100

Product Details

Country of Origin	China
Product Material	Abs,Aluminium
Colour/Finish	Matt Black
Style	Contemporary
Handle Type	Square T Shape
Fixings Included	Yes
Easy Clean	No
Adjustment Max	1175/1195
Adjustment Min	775/795
Ce Certified	Yes
Declaration Of Performance	Yes
Easy Fit	Yes
Enclosure Design	Framed
Entry Width	480 mm
Frame Finish	Matt Black
Glass Thickness	6 mm
Handles Included	Yes
No. Doors	2
Radius	538 mm
Support Bar Included	No
Ukca Certified	No
Wheel Type	Dual Quick Release

© ROXOR Group

Sales Code: STW002 **Barcode:** 5056211884576 **Brand:** nuie **Description:** Matt Black 90mm Fast Flow Shower Tray Waste



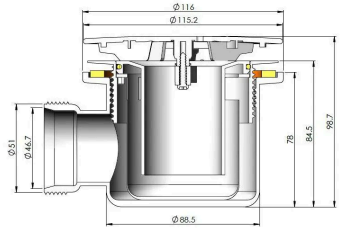

Product Dimensions

Product	99 x 116 x 116mm (H x W x D)
Packaged	100 x 140 x 170mm (H x W x D)
Nett Weight	0.31 kg
Packaged Weight	0.37 kg

Packaging Details

Box Qty	1

Product Details

Country of Origin	United Kingdom
Product Material	Polypropylene
Waste Type	Fast Flow
Colour/Finish	Matt Black
Style	Contemporary
Waste Shape	Round

© ROXOR Group