Sales Code: ENZRE024

Barcode: 5056678409626

Brand: nuie

Description: nuie Rene 1000mm x 800mm Chrome Right Hand Offset Quadrant Shower Enclosure With White Tray, Waste and Round Thermostatic Shower Kit



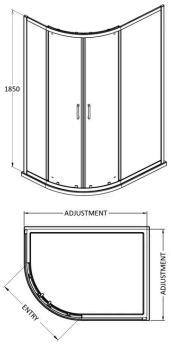

Product Dimensions

Product	1850 x 980 x 780mm (H x W x D)
Packaged	550 x 550 x 550mm (H x W x D)
Nett Weight	69.29 kg
Packaged Weight	69.79 kg

Packaging Details

Box Qty	4

Product Details

Country of Origin	China
Product Material	Acrylic Capped Abs Caco3 And Pu,Aluminium,Glass
Colour/Finish	Chrome
Style	Contemporary
Ce Certified	Yes
Enclosure Design	Framed
Frame Finish	Satin Chrome
Glass Thickness	6 mm
Waste Included	Yes

© ROXOR Group

Sales Code: JTY375 **Barcode:** 5055369026869 **Brand:** nuie **Description:** nuie Chrome Thermostatic Bar Dual Shower Valve



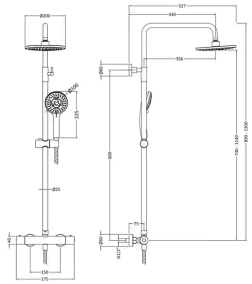

Product Dimensions

Product	1245 x 267 x 429mm (H x W x D)
Packaged	85 x 410 x 880mm (H x W x D)
Outer Box	570 x 780 x 450mm (H x W x D)
Nett Weight	3.98 kg
Packaged Weight	4.15 kg

Packaging Details

Box Qty	1
Label Size (mm)	50 x 100
Label Colour	White
Label Qty	2.0000

Product Details

Country of Origin	China
Product Material	Brass Abs
Control Type	Manual
WRAS Approved	Yes
Valve/Cartridge Type	1/4 Turn
Colour/Finish	Chrome
Mount Type	Surface/Wall
Style	Contemporary
Handle Type	Round
Easy Clean	Yes
TMV2 Approved	Yes
TMV3 Approved	No
Pipe Size	15 mm (1/2" BSP)
Pipe Centres	150
Handset Included	Yes
Head Included	Yes
Hose Included	Yes
Hose Length	1500 mm
Min Operating Pressure	1 Bar
No. Outlets	2.0000
Outlet Elbow Supplied	No
Tmv2 Approval Number	2503071
Valve / Cartridge Type	1/4 Turn
Wras Approval No	2307019

© ROXOR Group

Sales Code: NTP109 **Barcode:** 5055369006120 **Brand:** nuie **Description:** 1000 x 800mm White Slimline Right Hand Offset Quadrant Shower Tray



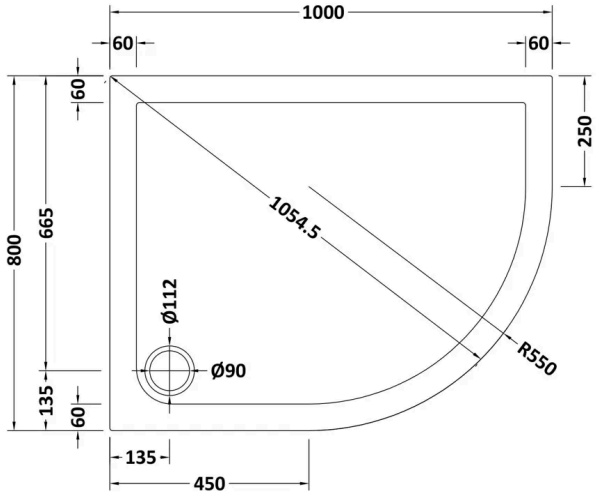

Product Dimensions

Product	40 x 800 x 1000mm (H x W x L)
Packaged	80 x 840 x 1040mm (H x W x D)
Nett Weight	22 kg
Packaged Weight	22.3 kg

Packaging Details

Box Qty	1

Product Details

Country of Origin	United Kingdom
Product Material	Acrylic Capped Abs Caco3 And Pu
Colour/Finish	White
Style	Contemporary
Ce Certified	Yes
Leg Set Included	No
Raised Edge	Yes
Slip Resistant	No
Waste Included	No
Waste Size Required	90mm

© ROXOR Group

Sales Code: SQU108 **Barcode:** 5056211821861 **Brand:** nuie **Description:** Nuie Rene 980mm Framed Chrome Offset Quadrant Shower Enclosure



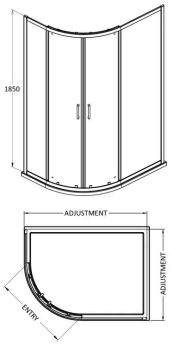

Product Dimensions

Product	1850 x 980 x 780mm (H x W x D)
Packaged	1910 x 450 x 110mm (H x W x D)
Nett Weight	43.5 kg
Packaged Weight	45.5 kg

Packaging Details

Box Qty	1
Label Size (mm)	50 x 100

Product Details

Country of Origin	China
Product Material	Abs,Aluminium
Colour/Finish	Chrome
Style	Contemporary
Handle Type	Square T Shape
Fixings Included	Yes
Easy Clean	No
Adjustment Max	975/995
Adjustment Min	775/795
Ce Certified	Yes
Declaration Of Performance	Yes
Easy Fit	Yes
Enclosure Design	Framed
Entry Width	480 mm
Frame Finish	Chrome
Glass Thickness	6 mm
Handles Included	Yes
No. Doors	2
Radius	538 mm
Support Bar Included	No
Ukca Certified	No
Wheel Type	Dual Quick Release

© ROXOR Group

Sales Code: STW001 **Barcode:** 5055369011629 **Brand:** nuie **Description:** Chrome 90mm Round Fast Flow Shower Waste



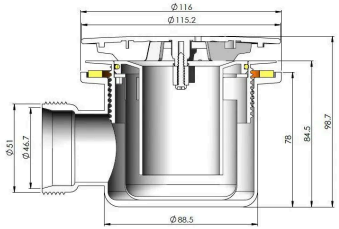

Product Dimensions

Product	99 x 116 x 116mm (H x W x D)
Packaged	100 x 140 x 170mm (H x W x D)
Nett Weight	0.31 kg
Packaged Weight	0.37 kg

Packaging Details

Box Qty	1

Product Details

Country of Origin	United Kingdom
Product Material	Polypropylene
Waste Type	Fast Flow
Colour/Finish	Chrome
Style	Contemporary
Waste Shape	Round

© ROXOR Group