Sales Code: ENZET066W

Barcode: 5056678426395

Brand: nuie

Description: nuie Rene 1200mm x 800mm Matt Black Right Hand Offset Quadrant Shower Enclosure With White Tray and Waste



Technical Drawing Not Available

Product Dimensions

Product	1900 x 1180 x 780mm (H x W x D)
Packaged	1950 x 1000 x 1000mm (H x W x D)
Nett Weight	74.21 kg
Packaged Weight	74.71 kg

Product Details

Country of Origin	China
Product Material	Acrylic Capped Abs Caco3 And Pu,Aluminium,Glass
Colour/Finish	Matt Black
Style	Contemporary
Easy Clean	No
Adjustment Max	1175/1195
Adjustment Min	775/795
Ce Certified	Yes
Easy Fit	Yes
Enclosure Design	Framed
Entry Width	480 mm
Frame Finish	Matt Black
Glass Thickness	6 mm
Handle Material	ABS
Handles Included	Yes
Raised Edge	Yes
Return Panel Included	No
Slip Resistant	No
Support Bar Included	No
Waste Included	Yes
Waste Shape	Round
Waste Size Required	90mm
Wheel Type	Plastic Dual Quick Release

© ROXOR Group

Sales Code: NTP113 **Barcode:** 5055369006168 **Brand:** nuie **Description:** 1200 x 800mm White Slimline Right Hand Offset Quadrant Shower Tray



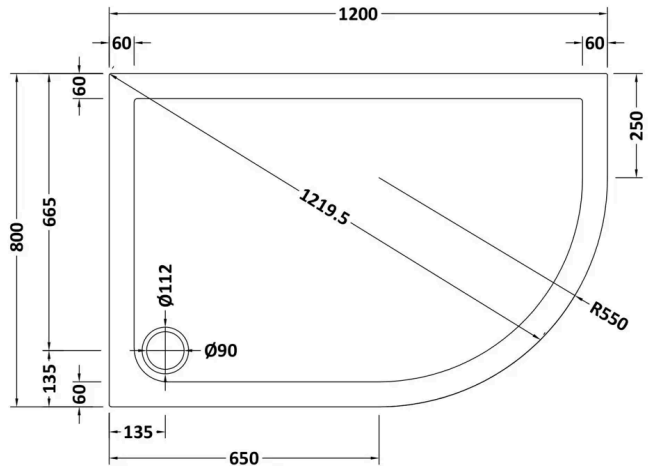

Product Dimensions

Product	40 x 800 x 1200mm (H x W x L)
Packaged	80 x 840 x 1240mm (H x W x D)
Nett Weight	27.6 kg
Packaged Weight	27.9 kg

Product Details

Country of Origin	United Kingdom
Product Material	Acrylic Capped Abs Caco3 And Pu
Colour/Finish	White
Style	Contemporary
Ce Certified	Yes
Leg Set Included	No
Raised Edge	Yes
Slip Resistant	No
Waste Included	No
Waste Size Required	90mm

© ROXOR Group

Sales Code: SMQU128BP-E6 **Barcode:** 5056678452493 **Brand:** nuie **Description:** nuie Rene 1200mm Matt Black Offset Quadrant Shower Enclosure



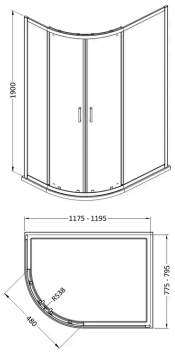

Product Dimensions

Product	1900 x 1180 x 780mm (H x W x D)
Packaged	1955 x 665 x 120mm (H x W x D)
Nett Weight	46.8 kg
Packaged Weight	46.8 kg

Product Details

Country of Origin	China
Product Material	Aluminium
Colour/Finish	Matt Black
Style	Contemporary
Handle Type	Square T Shape
Fixings Included	Yes
Easy Clean	No
Adjustment Max	1175/1195
Adjustment Min	775/795
Ce Certified	Yes
Easy Fit	Yes
Enclosure Design	Framed
Entry Width	480 mm
Frame Finish	Matt Black
Glass Thickness	6 mm
Handle Material	ABS
Handles Included	Yes
No. Doors	2
Radius	538 mm
Wheel Type	Dual Quick Release

© ROXOR Group

Sales Code: STW002 **Barcode:** 5056211884576 **Brand:** nuie **Description:** Matt Black 90mm Fast Flow Shower Tray Waste



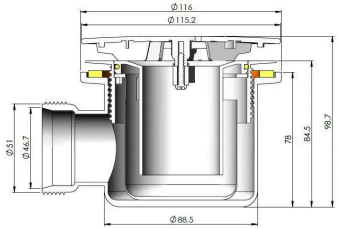

Product Dimensions

Product	99 x 116 x 116mm (H x W x D)
Packaged	100 x 140 x 170mm (H x W x D)
Nett Weight	0.31 kg
Packaged Weight	0.37 kg

Product Details

Country of Origin	United Kingdom
Product Material	Polypropylene
Waste Type	Fast Flow
Colour/Finish	Matt Black
Style	Contemporary
Waste Shape	Round

© ROXOR Group