**Sales Code:** ENZET064W

**Barcode:** 5056678426418

**Brand:** nuie

**Description:** nuie Rene 1200mm x 800mm Chrome Right Hand Offset Quadrant Shower Enclosure With White Tray and Waste



*Technical Drawing Not Available*

## Product Dimensions

| | |
|---|---|
| Product | 1900 x 1180 x 780mm (H x W x D) |
| Packaged | 1950 x 1000 x 1000mm (H x W x D) |
| Nett Weight | 74.21 kg |
| Packaged Weight | 74.71 kg |

## Product Details

| | |
|---|---|
| Country of Origin | China |
| Product Material | Acrylic Capped Abs Caco3 And Pu,Aluminium,Glass |
| Colour/Finish | Chrome |
| Style | Contemporary |
| Easy Clean | No |
| Adjustment Max | 1175/1195 |
| Adjustment Min | 775/795 |
| Ce Certified | Yes |
| Easy Fit | Yes |
| Enclosure Design | Framed |
| Entry Width | 480 mm |
| Frame Finish | Chrome |
| Glass Thickness | 6 mm |
| Handle Material | ABS |
| Handles Included | Yes |
| Raised Edge | Yes |
| Return Panel Included | No |
| Slip Resistant | No |
| Support Bar Included | No |
| Waste Included | Yes |
| Waste Shape | Round |
| Waste Size Required | 90mm |
| Wheel Type | Plastic Dual Quick Release |

© ROXOR Group

**Sales Code:** NTP113 **Barcode:** 5055369006168 **Brand:** nuie **Description:** 1200 x 800mm White Slimline Right Hand Offset Quadrant Shower Tray



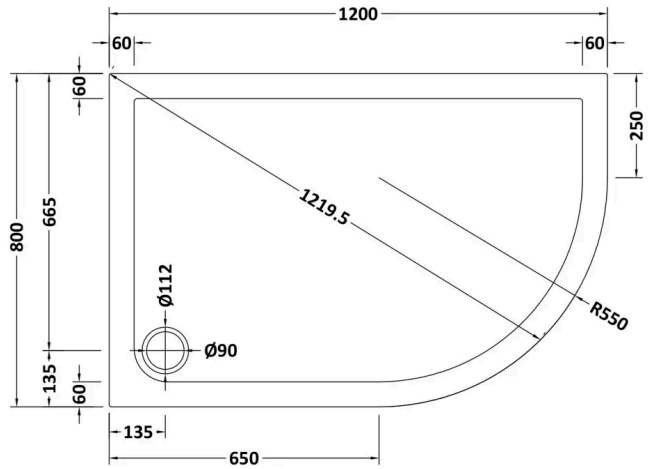


## Product Dimensions

| | |
|---|---|
| Product | 40 x 800 x 1200mm (H x W x L) |
| Packaged | 80 x 840 x 1240mm (H x W x D) |
| Nett Weight | 27.6 kg |
| Packaged Weight | 27.9 kg |

## Product Details

| | |
|---|---|
| Country of Origin | United Kingdom |
| Product Material | Acrylic Capped Abs Caco3 And Pu |
| Colour/Finish | White |
| Style | Contemporary |
| Ce Certified | Yes |
| Leg Set Included | No |
| Raised Edge | Yes |
| Slip Resistant | No |
| Waste Included | No |
| Waste Size Required | 90mm |

© ROXOR Group

**Sales Code:** SMQU128-E6 **Barcode:** 5056678432440 **Brand:** nuie **Description:** nuie Rene 1200 x 800mm Chrome Offset Quadrant Shower Enclosure



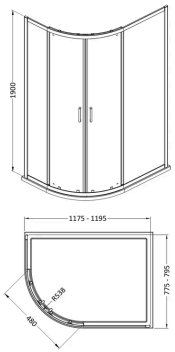


## Product Dimensions

| | |
|---|---|
| Product | 1900 x 1180 x 780mm (H x W x D) |
| Packaged | 1955 x 665 x 120mm (H x W x D) |
| Nett Weight | 46.8 kg |
| Packaged Weight | 46.8 kg |

## Product Details

| | |
|---|---|
| Country of Origin | China |
| Product Material | Aluminium |
| Colour/Finish | Chrome |
| Style | Contemporary |
| Handle Type | Square T Shape |
| Fixings Included | Yes |
| Easy Clean | No |
| Adjustment Max | 1175/1195 |
| Adjustment Min | 775/795 |
| Ce Certified | Yes |
| Easy Fit | Yes |
| Enclosure Design | Framed |
| Entry Width | 480 mm |
| Frame Finish | Chrome |
| Glass Thickness | 6 mm |
| Handle Material | ABS |
| Handles Included | Yes |
| No. Doors | 2 |
| Radius | 538 mm |
| Wheel Type | Dual Quick Release |

© ROXOR Group

**Sales Code:** STW001 **Barcode:** 5055369011629 **Brand:** nuie **Description:** Chrome 90mm Round Fast Flow Shower Waste



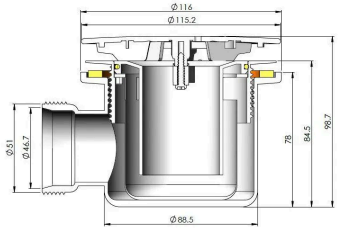


## Product Dimensions

| | |
|---|---|
| Product | 99 x 116 x 116mm (H x W x D) |
| Packaged | 100 x 140 x 170mm (H x W x D) |
| Nett Weight | 0.31 kg |
| Packaged Weight | 0.37 kg |

## Product Details

| | |
|---|---|
| Country of Origin | United Kingdom |
| Product Material | Polypropylene |
| Waste Type | Fast Flow |
| Colour/Finish | Chrome |
| Style | Contemporary |
| Waste Shape | Round |

© ROXOR Group