Sales Code: ENZET051 **Barcode:** 5056678467305 **Brand:** nuie **Description:** nuie Rene 760mm x 760mm Matt Black Bi-fold Door Shower Enclosure With White Tray



Technical Drawing Not Available

Product Dimensions

Product	1900 x 750 x 39mm (H x W x D)
Packaged	1950 x 1000 x 1000mm (H x W x D)
Nett Weight	62.1 kg
Packaged Weight	62.6 kg

Packaging Details

Box Qty	3

Product Details

Country of Origin	China
Product Material	Acrylic Capped Abs Caco3 And Pu,Aluminium,Glass
Colour/Finish	Matt Black
Style	Contemporary
Easy Clean	No
Adjustment Max	750
Adjustment Min	710
Ce Certified	Yes
Easy Fit	Yes
Enclosure Design	Framed
Entry Width	516 mm
Frame Finish	Matt Black
Glass Thickness	4 mm
Handle Material	ABS
Handles Included	Yes
Raised Edge	Yes
Return Panel Included	No
Slip Resistant	No
Support Bar Included	No
Waste Included	No
Waste Shape	Round
Waste Size Required	90mm
Wheel Type	Captive and Fixed

© ROXOR Group

Sales Code: NTP003 **Barcode:** 5055369006397 **Brand:** nuie **Description:** 760 x 760mm White Slimline Square Shower Tray



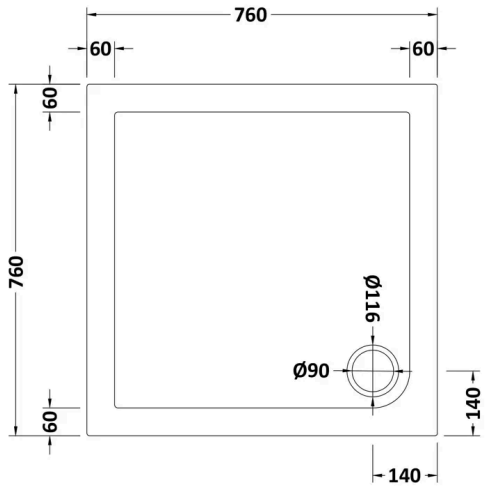

Product Dimensions

Product	40 x 760 x 760mm (H x W x L)
Packaged	80 x 800 x 800mm (H x W x D)
Nett Weight	17.9 kg
Packaged Weight	18.2 kg

Packaging Details

Box Qty	1

Product Details

Country of Origin	United Kingdom
Product Material	Acrylic Capped Abs Caco3 And Pu
Colour/Finish	White
Style	Contemporary
Ce Certified	Yes
Leg Set Included	No
Raised Edge	Yes
Slip Resistant	No
Waste Included	No
Waste Size Required	90mm

© ROXOR Group

Sales Code: SMBD76BP-E6 **Barcode:** 5056678452561 **Brand:** nuie **Description:** nuie Rene 760mm Matt Black Bi-fold Shower Door



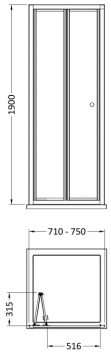

Product Dimensions

Product	1900 x 750 x 39mm (H x W x D)
Packaged	1955 x 755 x 85mm (H x W x D)
Nett Weight	22.8 kg
Packaged Weight	22.8 kg

Packaging Details

Box Qty	1

Product Details

Country of Origin	China
Product Material	Aluminium
Colour/Finish	Matt Black
Style	Contemporary
Handle Type	Knob
Fixings Included	Yes
Easy Clean	No
Adjustment Max	750
Adjustment Min	710
Ce Certified	Yes
Easy Fit	Yes
Enclosure Design	Framed
Entry Width	516 mm
Frame Finish	Matt Black
Glass Thickness	4 mm
Handle Material	ABS
Handles Included	Yes
No. Doors	1
Wheel Type	Captive and Fixed

© ROXOR Group

Sales Code: SMSP76BP-E6 **Barcode:** 5056678452400 **Brand:** nuie **Description:** nuie Rene 760mm Matt Black Side Panel



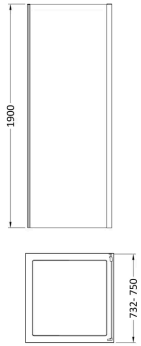

Product Dimensions

Product	1900 x 750 x 31mm (H x W x D)
Packaged	1962 x 750 x 60mm (H x W x D)
Nett Weight	21.9 kg
Packaged Weight	21.9 kg

Packaging Details

Box Qty	1

Product Details

Country of Origin	China
Product Material	Aluminium
Colour/Finish	Matt Black
Style	Contemporary
Fixings Included	Yes
Easy Clean	No
Adjustment Max	735
Adjustment Min	715
Ce Certified	Yes
Easy Fit	Yes
Enclosure Design	Semi-Frameless
Frame Finish	Matt Black
Glass Thickness	6 mm

© ROXOR Group