Sales Code: ENZET037W

Barcode: 5056678426685

Brand: nuie

Description: nuie Rene 760mm x 760mm Chrome Pivot Door Shower Enclosure With White Tray and Waste



Technical Drawing Not Available

Product Dimensions

Product	1900 x 755 x 44mm (H x W x D)
Packaged	1950 x 1000 x 1000mm (H x W x D)
Nett Weight	62.41 kg
Packaged Weight	62.91 kg

Product Details

Country of Origin	China
Product Material	Acrylic Capped Abs Caco3 And Pu,Aluminium,Glass
Colour/Finish	Chrome
Style	Contemporary
Easy Clean	No
Adjustment Max	755
Adjustment Min	720
Ce Certified	Yes
Easy Fit	Yes
Enclosure Design	Framed
Entry Width	520 mm
Frame Finish	Chrome
Glass Thickness	6 mm
Handle Material	ABS
Handles Included	Yes
Raised Edge	Yes
Return Panel Included	No
Slip Resistant	No
Support Bar Included	No
Waste Included	Yes
Waste Shape	Round
Waste Size Required	90mm

© ROXOR Group

Sales Code: NTP003 **Barcode:** 5055369006397 **Brand:** nuie **Description:** 760 x 760mm White Slimline Square Shower Tray



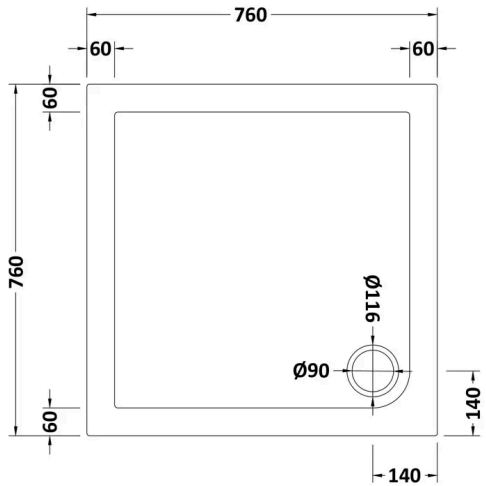

Product Dimensions

Product	40 x 760 x 760mm (H x W x L)
Packaged	80 x 800 x 800mm (H x W x D)
Nett Weight	17.9 kg
Packaged Weight	18.2 kg

Product Details

Country of Origin	United Kingdom
Product Material	Acrylic Capped Abs Caco3 And Pu
Colour/Finish	White
Style	Contemporary
Ce Certified	Yes
Leg Set Included	No
Raised Edge	Yes
Slip Resistant	No
Waste Included	No
Waste Size Required	90mm

© ROXOR Group

Sales Code: SMPD76-E6 **Barcode:** 5056678432266 **Brand:** nuie **Description:** nuie Rene 760mm Chrome Pivot Shower Door



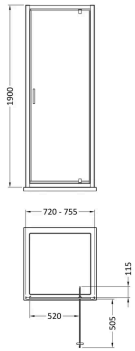

Product Dimensions

Product	1900 x 755 x 44mm (H x W x D)
Packaged	1962 x 770 x 62mm (H x W x D)
Nett Weight	22.8 kg
Packaged Weight	22.8 kg

Product Details

Country of Origin	China
Product Material	Aluminium
Colour/Finish	Chrome
Style	Contemporary
Handle Type	Square T Shape
Fixings Included	Yes
Easy Clean	No
Adjustment Max	755
Adjustment Min	720
Ce Certified	Yes
Easy Fit	Yes
Enclosure Design	Framed
Entry Width	520 mm
Frame Finish	Chrome
Glass Thickness	6 mm
Handle Material	ABS
Handles Included	Yes
No. Doors	1

© ROXOR Group

Sales Code: SMSP76-E6 **Barcode:** 5056678432358 **Brand:** nuie **Description:** nuie Rene 760mm Chrome Side Panel

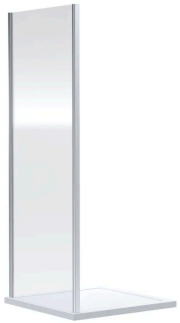

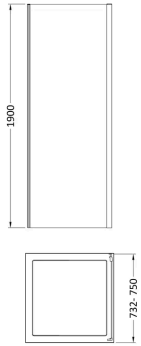

Product Dimensions

Product	1900 x 750 x 31mm (H x W x D)
Packaged	1962 x 750 x 60mm (H x W x D)
Nett Weight	21.9 kg
Packaged Weight	21.9 kg

Product Details

Country of Origin	China
Product Material	Aluminium
Colour/Finish	Chrome
Style	Contemporary
Fixings Included	Yes
Easy Clean	No
Adjustment Max	735
Adjustment Min	715
Ce Certified	Yes
Easy Fit	Yes
Enclosure Design	Semi-Frameless
Frame Finish	Chrome
Glass Thickness	6 mm

© ROXOR Group

Sales Code: STW001 **Barcode:** 5055369011629 **Brand:** nuie **Description:** Chrome 90mm Round Fast Flow Shower Waste



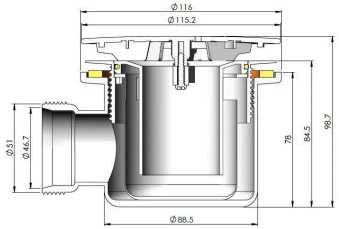

Product Dimensions

Product	99 x 116 x 116mm (H x W x D)
Packaged	100 x 140 x 170mm (H x W x D)
Nett Weight	0.31 kg
Packaged Weight	0.37 kg

Product Details

Country of Origin	United Kingdom
Product Material	Polypropylene
Waste Type	Fast Flow
Colour/Finish	Chrome
Style	Contemporary
Waste Shape	Round

© ROXOR Group