Sales Code: ENZET005

Barcode: 5056678466841

Brand: nuie

Description: nuie Rene 1000mm x 760mm Brushed Brass Single Sliding Shower Enclosure With White Tray



Technical Drawing Not Available

Product Dimensions

Product	1900 x 990 x 44mm (H x W x D)
Packaged	1950 x 1000 x 1000mm (H x W x D)
Nett Weight	73 kg
Packaged Weight	73.5 kg

Packaging Details

Box Qty	3

Product Details

Country of Origin	China
Product Material	Acrylic Capped Abs Caco3 And Pu,Aluminium,Glass
Colour/Finish	Brushed Brass
Style	Contemporary
Easy Clean	No
Adjustment Max	995
Adjustment Min	960
Ce Certified	Yes
Easy Fit	Yes
Enclosure Design	Framed
Entry Width	385 mm
Frame Finish	Brushed Brass
Glass Thickness	6 mm
Handle Material	ABS
Handles Included	Yes
Raised Edge	Yes
Return Panel Included	No
Slip Resistant	No
Support Bar Included	No
Waste Included	No
Waste Shape	Round
Waste Size Required	90mm
Wheel Type	Plastic Dual Quick Release

© ROXOR Group

Sales Code: NTP012 **Barcode:** 5055369006243 **Brand:** nuie **Description:** 1000 x 760mm White Slimline Rectangular Shower Tray



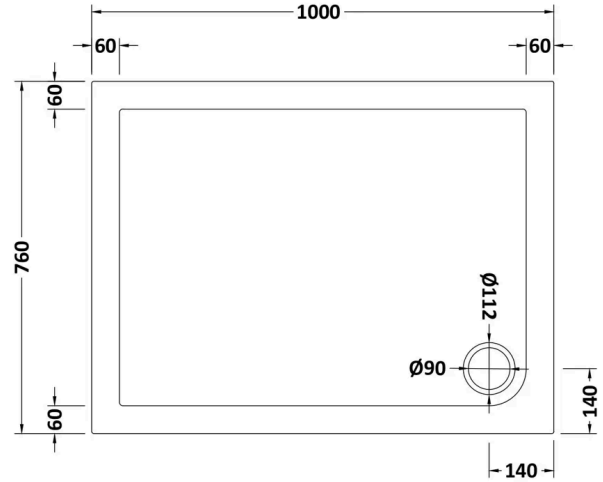

Product Dimensions

Product	40 x 760 x 1000mm (H x W x L)
Packaged	80 x 800 x 1040mm (H x W x D)
Nett Weight	23.3 kg
Packaged Weight	23.6 kg

Packaging Details

Box Qty	1

Product Details

Country of Origin	United Kingdom
Product Material	Acrylic Capped Abs Caco3 And Pu
Colour/Finish	White
Style	Contemporary
Ce Certified	Yes
Leg Set Included	No
Raised Edge	Yes
Slip Resistant	No
Waste Included	No
Waste Size Required	90mm

© ROXOR Group

Sales Code: SMSL10BB-E6 **Barcode:** 5056678452684 **Brand:** nuie **Description:** nuie Rene 1000mm Brushed Brass Sliding Shower Door



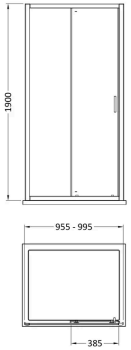

Product Dimensions

Product	1900 x 990 x 44mm (H x W x D)
Packaged	1962 x 45 x 670mm (H x W x D)
Nett Weight	28.3 kg
Packaged Weight	28.3 kg

Packaging Details

Box Qty	1

Product Details

Country of Origin	China
Product Material	Aluminium
Colour/Finish	Brushed Brass
Style	Contemporary
Handle Type	Square T Shape
Fixings Included	Yes
Easy Clean	No
Adjustment Max	995
Adjustment Min	955
Ce Certified	Yes
Easy Fit	Yes
Enclosure Design	Framed
Entry Width	385 mm
Frame Finish	Chrome
Glass Thickness	6 mm
Handle Material	ABS
Handles Included	Yes
No. Doors	1
Wheel Type	Dual Quick Release

© ROXOR Group

Sales Code: SMSP76BB-E6 **Barcode:** 5056678452745 **Brand:** nuie **Description:** nuie Rene 760mm Brushed Brass Side Panel



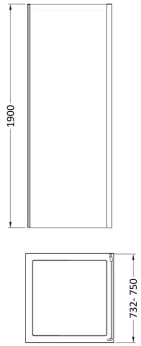

Product Dimensions

Product	1900 x 750 x 31mm (H x W x D)
Packaged	1962 x 750 x 60mm (H x W x D)
Nett Weight	21.9 kg
Packaged Weight	21.9 kg

Packaging Details

Box Qty	1

Product Details

Country of Origin	China
Product Material	Aluminium
Colour/Finish	Brushed Brass
Style	Contemporary
Fixings Included	Yes
Easy Clean	No
Adjustment Max	735
Adjustment Min	715
Ce Certified	Yes
Easy Fit	Yes
Enclosure Design	Semi-Frameless
Frame Finish	Brushed Brass
Glass Thickness	6 mm

© ROXOR Group