Sales Code: ENZET002W

Barcode: 5056678427033

Brand: nuie

Description: nuie Rene 1000mm x 700mm Brushed Brass Single Sliding Shower Enclosure With White Tray and Waste



Technical Drawing Not Available

Product Dimensions

Product	1900 x 990 x 44mm (H x W x D)
Packaged	1950 x 1000 x 1000mm (H x W x D)
Nett Weight	70.51 kg
Packaged Weight	71.01 kg

Product Details

Country of Origin	China
Product Material	Acrylic Capped Abs Caco3 And Pu,Aluminium,Glass
Colour/Finish	Brushed Brass
Style	Contemporary
Easy Clean	No
Adjustment Max	995
Adjustment Min	960
Ce Certified	Yes
Easy Fit	Yes
Enclosure Design	Framed
Entry Width	385 mm
Frame Finish	Brushed Brass
Glass Thickness	6 mm
Handle Material	ABS
Handles Included	Yes
Raised Edge	Yes
Return Panel Included	No
Slip Resistant	No
Support Bar Included	No
Waste Included	Yes
Waste Shape	Round
Waste Size Required	90mm
Wheel Type	Plastic Dual Quick Release

© ROXOR Group

Sales Code: NTP021 **Barcode:** 5055369025398 **Brand:** nuie **Description:** 1000 x 700mm White Slimline Rectangular Shower Tray



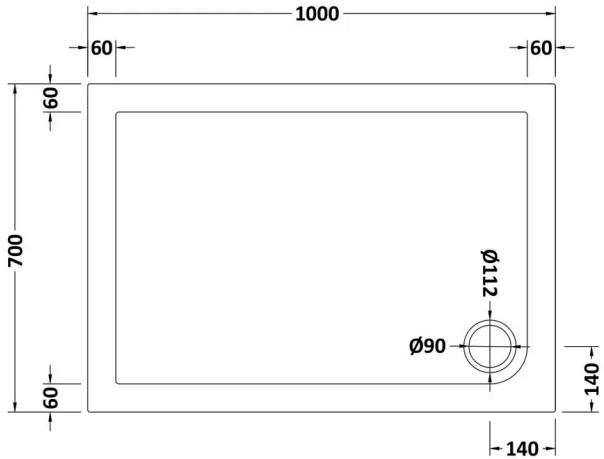

Product Dimensions

Product	40 x 700 x 1000mm (H x W x L)
Packaged	80 x 740 x 1040mm (H x W x D)
Nett Weight	22.2 kg
Packaged Weight	22.5 kg

Product Details

Country of Origin	United Kingdom
Product Material	Acrylic Capped Abs Caco3 And Pu
Colour/Finish	White
Style	Contemporary
Ce Certified	Yes
Leg Set Included	No
Raised Edge	Yes
Slip Resistant	No
Waste Included	No
Waste Size Required	90mm

© ROXOR Group

Sales Code: SMSL10BB-E6 **Barcode:** 5056678452684 **Brand:** nuie **Description:** nuie Rene 1000mm Brushed Brass Sliding Shower Door

filerobot by scaleflex

Missing origin image

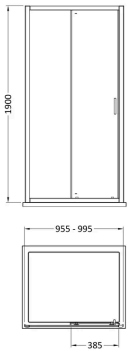

Product Dimensions

Product	1900 x 990 x 44mm (H x W x D)
Packaged	1962 x 45 x 670mm (H x W x D)
Nett Weight	28.3 kg
Packaged Weight	28.3 kg

Product Details

Country of Origin	China
Product Material	Aluminium
Colour/Finish	Brushed Brass
Style	Contemporary
Handle Type	Square T Shape
Fixings Included	Yes
Easy Clean	No
Adjustment Max	995
Adjustment Min	955
Ce Certified	Yes
Easy Fit	Yes
Enclosure Design	Framed
Entry Width	385 mm
Frame Finish	Chrome
Glass Thickness	6 mm
Handle Material	ABS
Handles Included	Yes
No. Doors	1
Wheel Type	Dual Quick Release

Sales Code: SMSP70BB-E6 **Barcode:** 5056678452738 **Brand:** nuie **Description:** nuie Rene 700mm Brushed Brass Side Panel



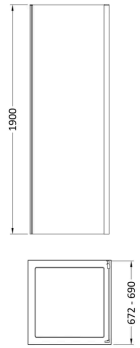

Product Dimensions

Product	1900 x 690 x 31mm (H x W x D)
Packaged	1962 x 690 x 60mm (H x W x D)
Nett Weight	20.2 kg
Packaged Weight	20.2 kg

Product Details

Country of Origin	China
Product Material	Aluminium
Colour/Finish	Brushed Brass
Style	Contemporary
Fixings Included	Yes
Easy Clean	No
Adjustment Max	690
Adjustment Min	672
Ce Certified	Yes
Easy Fit	Yes
Enclosure Design	Semi-Frameless
Frame Finish	Brushed Brass
Glass Thickness	6 mm

© ROXOR Group

Sales Code: STW005 **Barcode:** 5056462623986 **Brand:** nuie **Description:** Brushed Brass 90mm Fast Flow Shower Tray Waste



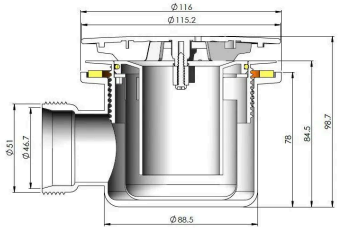

Product Dimensions

Product	99 x 116 x 116mm (H x W x D)
Packaged	100 x 140 x 170mm (H x W x D)
Nett Weight	0.31 kg
Packaged Weight	0.37 kg

Product Details

Country of Origin	United Kingdom
Product Material	Polypropylene
Waste Type	Fast Flow
Colour/Finish	Brushed Brass
Style	Contemporary
Waste Shape	Round

© ROXOR Group