Sales Code: ENQU108 **Barcode:** 5056678496794 **Brand:** nuie Choice **Description:** nuie choice Ensky 1000 x 800mm Chrome Offset Quadrant Shower Enclosure



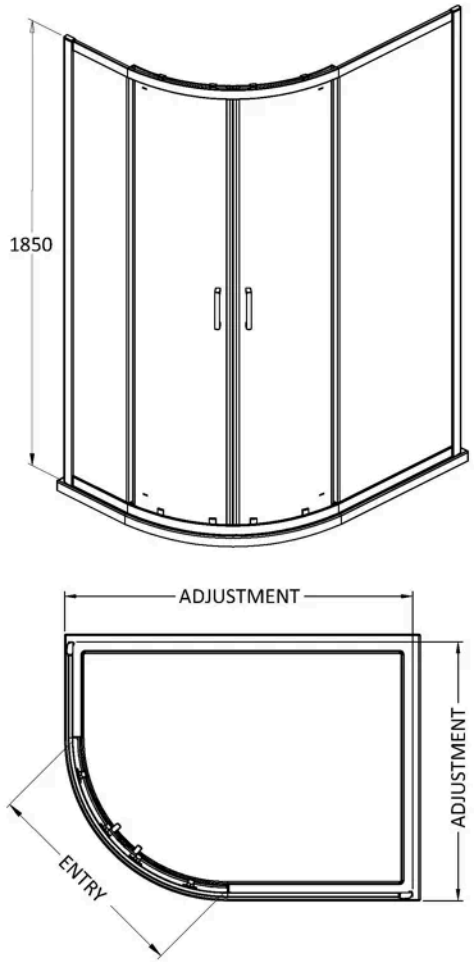

Product Dimensions

Product	1850 x 980 x 780mm (H x W x D)
Packaged	1910 x 450 x 110mm (H x W x D)
Nett Weight	43.5 kg
Packaged Weight	45.5 kg

Packaging Details

Box Qty	1
Label Size (mm)	50 x 100

Product Details

Country of Origin	China
Product Material	Abs,Aluminium
Colour/Finish	Chrome
Style	Contemporary
Handle Type	Square T Shape
Fixings Included	Yes
Easy Clean	No
Adjustment Max	975/995
Adjustment Min	775/795
Ce Certified	Yes
Declaration Of Performance	Yes
Easy Fit	Yes
Enclosure Design	Framed
Entry Width	480 mm
Frame Finish	Chrome
Glass Thickness	6 mm
Handles Included	Yes
No. Doors	2
Radius	538 mm
Support Bar Included	No
Ukca Certified	No
Wheel Type	Dual Quick Release

© ROXOR Group