Sales Code: EM1600P **Barcode:** 5056474551581 **Brand:** Elementa Steel Baths **Description:** Arley Pro Contract 1600mm Steel Single Ended Bath



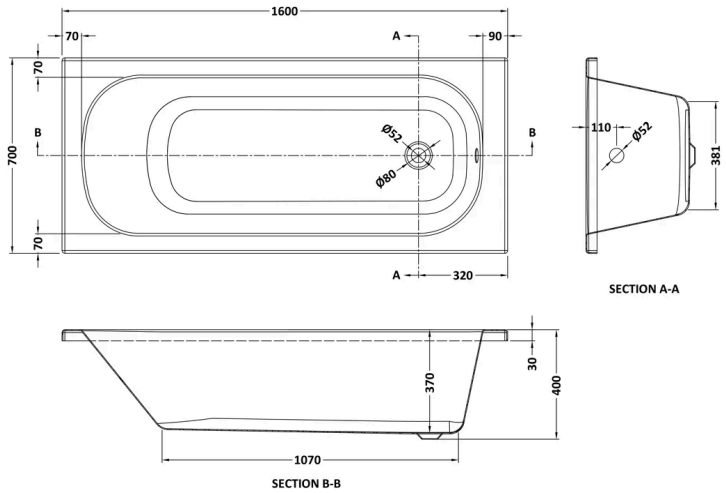

Product Dimensions

Product	700 x 515 x 1600mm (W x D x L)
Packaged	1520 x 720 x 1120mm (H x W x D)
Nett Weight	45 kg
Packaged Weight	45 kg

Packaging Details

Box Qty	1

Product Details

Volume	85 Litre
Country of Origin	China
Product Material	Steel (1.8mm Gauge)
Colour/Finish	White
Style	Contemporary
Bath Panel Included	No
Hydrotherapy System	No
Includes Grips	No
Leg Set Included	No
No. Of Tapholes	No Tapholes
Overflow Included	Yes
Tap Included	No
Waste Included	No

© ROXOR Group