Sales Code: EM1500P **Barcode:** 5056474551574 **Brand:** Elementa Steel Baths **Description:** Arley Pro Contract 1500mm Steel Single Ended Bath



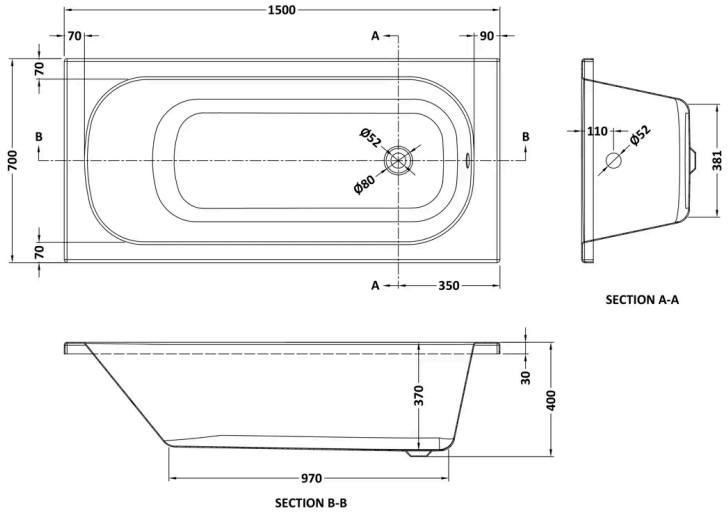

Product Dimensions

Product	700 x 520 x 1500mm (W x D x L)
Packaged	1520 x 720 x 1120mm (H x W x D)
Nett Weight	40 kg
Packaged Weight	40 kg

Packaging Details

Box Qty	1

Product Details

Volume	78 Litre
Country of Origin	China
Product Material	Steel (1.8mm Gauge)
Colour/Finish	White
Style	Contemporary
Bath Panel Included	No
Leg Set Included	No
No. Of Tapholes	No Tapholes
Overflow Included	Yes
Tap Included	No
Waste Included	No

© ROXOR Group