**Sales Code:** DPF396LCM-S

**Barcode:** 5064007070508

**Brand:** nuie

**Description:** nuie Deco Satin Blue 800mm 1 Drawer Wall Hung Vanity Unit With Carrara Laminate Worktop and Shelf



*Technical Drawing Not Available*

## Product Dimensions

| | |
|---|---|
| Product | 381 x 805 x 390mm (H x W x D) |
| Nett Weight | 19.75 kg |
| Packaged Weight | 20.25 kg |

## Product Details

| | |
|---|---|
| Country of Origin | China |
| Product Material | Mfc Painted Gloss |
| Colour/Finish | Satin Blue |
| Mount Type | Wall Hung |
| Style | Contemporary |
| Handle Type | D Shape |
| Construction Method | Cam & Wood Dowel |
| Construction Type | Rigid |
| Drawer Type | 80mm High Metal S/C Inc Gallery |
| Fascia Finish | Mfc Painted Gloss |
| Fsc Certified | Yes |
| Handles Included | Yes |
| Material Thickness | 16 mm |
| No. Drawers | 1 |
| No. Shelves | 1 |
| Number Of Shelves | 1 |
| Waste Shroud | Yes |

© ROXOR Group

**Sales Code:** 154048SB **Barcode:** 5056462654942 **Brand:** nuie **Description:** Dark Grey Shelf Support Brackets



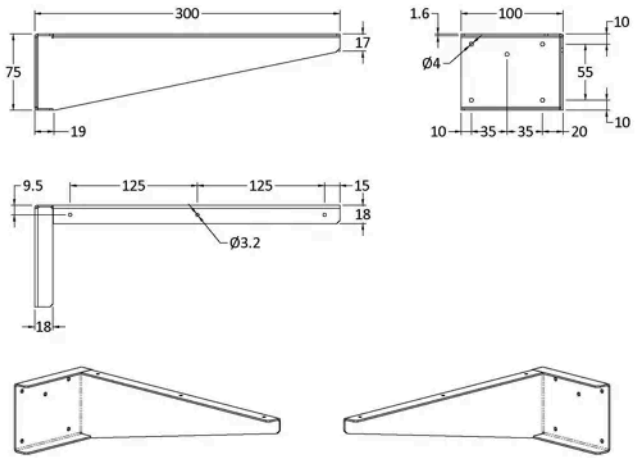


## Product Dimensions

| | |
|---|---|
| Product | 300 x 100 x 50mm (H x W x D) |
| Packaged | 90 x 130 x 330mm (H x W x D) |
| Nett Weight | 0.72 kg |
| Packaged Weight | 0.72 kg |

## Product Details

| | |
|---|---|
| Country of Origin | China |
| Product Material | Stainless Steel |
| Colour/Finish | Dark Grey |
| Style | Contemporary |

© ROXOR Group

**Sales Code:** FLT396 **Barcode:** 5056462655543 **Brand:** nuie **Description:** nuie Deco 800mm Satin Blue 1 Drawer Wall Hung Vanity Unit

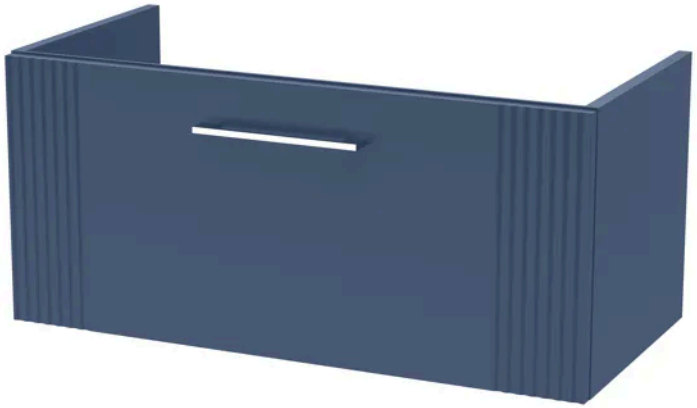

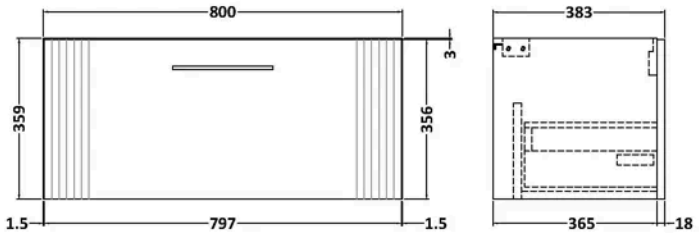


## Product Dimensions

| | |
|---|---|
| Product | 359 x 800 x 383mm (H x W x D) |
| Packaged | 380 x 820 x 405mm (H x W x D) |
| Nett Weight | 17.5 kg |
| Packaged Weight | 18 kg |

## Packaging Details

| | |
|---|---|
| Box Qty | 1 |

## Product Details

| | |
|---|---|
| Country of Origin | China |
| Product Material | Mdf Painted Matt |
| Colour/Finish | Satin Blue |
| Mount Type | Wall Hung |
| Style | Contemporary |
| Construction Method | Cam & Wood Dowel |
| Construction Type | Rigid |
| Fascia Finish | Mdf Painted Matt |
| Handles Included | Yes |
| Material Thickness | 18 mm |
| No. Drawers | 1 |
| No. Shelves | 1 |
| Number Of Shelves | 1 |

© ROXOR Group

**Sales Code:** LCM800 **Barcode:** 5056462624457 **Brand:** nuie **Description:** 805 x 390mm Carrera Marble Laminate Worktop



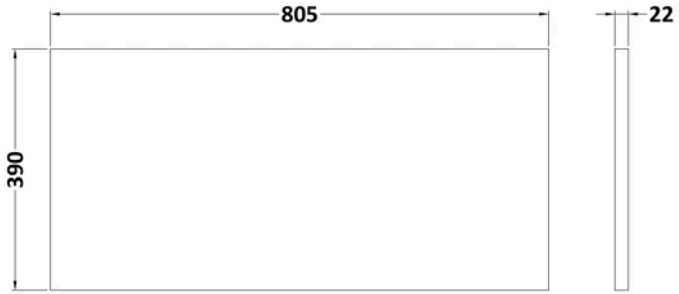


## Product Dimensions

| | |
|---|---|
| Product | 22 x 805 x 390mm (H x W x D) |
| Packaged | 25 x 810 x 455mm (H x W x D) |
| Nett Weight | 2.75 kg |
| Packaged Weight | 2.75 kg |

## Packaging Details

| | |
|---|---|
| Box Qty | 1 |

## Product Details

| | |
|---|---|
| Country of Origin | United Kingdom |
| Product Material | Mfc Laminated |
| Colour/Finish | Carrera Marble |
| Style | Contemporary |

© ROXOR Group

**Sales Code:** MWT380 **Barcode:** 5056211899785 **Brand:** nuie **Description:** 800mm Satin Blue MDF Matt Worktop



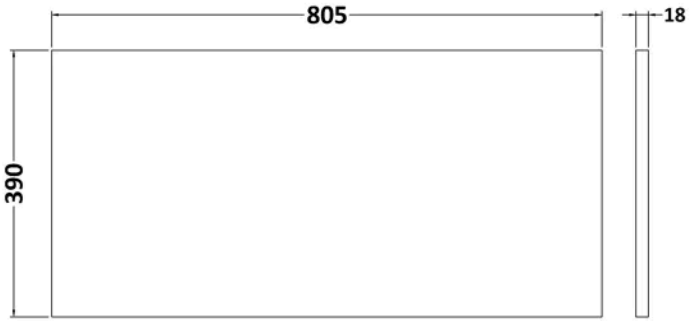


## Product Dimensions

| | |
|---|---|
| Product | 18 x 805 x 390mm (H x W x D) |
| Packaged | 25 x 625 x 410mm (H x W x D) |
| Nett Weight | 3 kg |
| Packaged Weight | 3.5 kg |

## Packaging Details

| | |
|---|---|
| Box Qty | 1 |

## Product Details

| | |
|---|---|
| Country of Origin | China |
| Product Material | Mdf Painted Matt |
| Colour/Finish | Satin Blue |
| Style | Contemporary |

© ROXOR Group