Sales Code: DPF196LCM-S

Barcode: 5064007070461

Brand: nuie

Description: nuie Deco Satin White 800mm 1 Drawer Wall Hung Vanity Unit With Carrara Laminate Worktop and Shelf

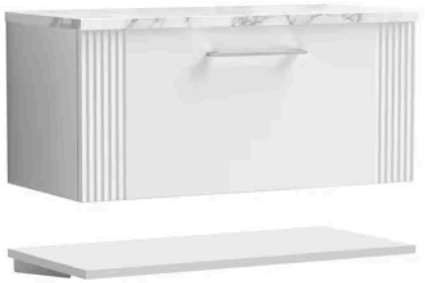

Technical Drawing Not Available

Product Dimensions

Product	381 x 805 x 390mm (H x W x D)
Nett Weight	19.75 kg
Packaged Weight	20.25 kg

Product Details

Country of Origin	China
Product Material	Mfc Painted Gloss
Colour/Finish	Satin White
Mount Type	Wall Hung
Style	Contemporary
Handle Type	D Shape
Construction Method	Cam & Wood Dowel
Construction Type	Rigid
Drawer Type	80mm High Metal S/C Inc Gallery
Fascia Finish	Mfc Painted Gloss
Fsc Certified	Yes
Handles Included	Yes
Material Thickness	16 mm
No. Drawers	1
No. Shelves	1
Number Of Shelves	1
Waste Shroud	Yes

© ROXOR Group

Sales Code: 154048SB **Barcode:** 5056462654942 **Brand:** nuie **Description:** Dark Grey Shelf Support Brackets



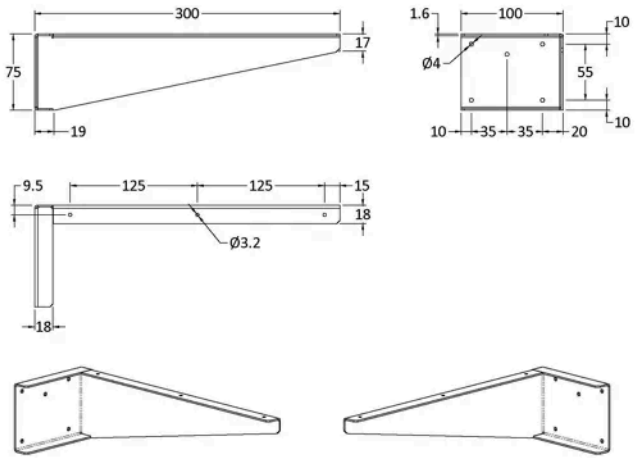

Product Dimensions

Product	300 x 100 x 50mm (H x W x D)
Packaged	90 x 130 x 330mm (H x W x D)
Nett Weight	0.72 kg
Packaged Weight	0.72 kg

Product Details

Country of Origin	China
Product Material	Stainless Steel
Colour/Finish	Dark Grey
Style	Contemporary

© ROXOR Group

Sales Code: FLT196 **Barcode:** 5056462655529 **Brand:** nuie **Description:** nuie Deco 800mm Satin White 1 Drawer Vanity Unit

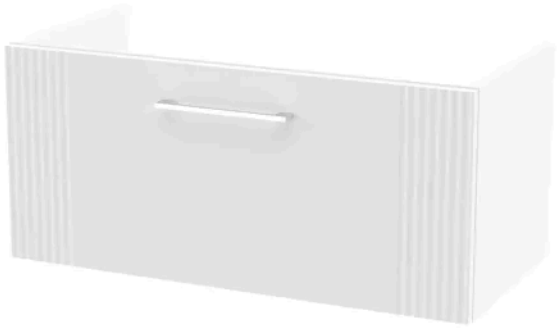

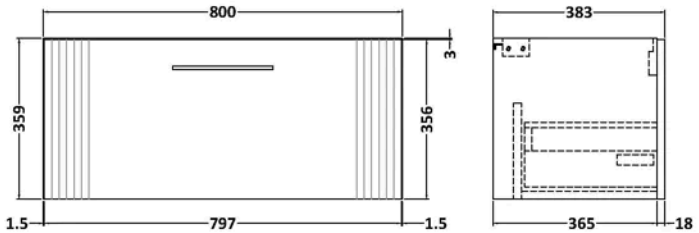

Product Dimensions

Product	359 x 800 x 383mm (H x W x D)
Packaged	380 x 820 x 405mm (H x W x D)
Nett Weight	17.5 kg
Packaged Weight	18 kg

Packaging Details

Box Qty	1

Product Details

Country of Origin	China
Product Material	Mdf Painted Matt
Colour/Finish	Satin White
Mount Type	Wall Hung
Style	Contemporary
Construction Method	Cam & Wood Dowel
Construction Type	Rigid
Fascia Finish	Mdf Painted Matt
Handles Included	Yes
Material Thickness	18 mm
No. Drawers	1
No. Shelves	1
Number Of Shelves	1

© ROXOR Group

Sales Code: LCM800 **Barcode:** 5056462624457 **Brand:** nuie **Description:** 805 x 390mm Carrera Marble Laminate Worktop



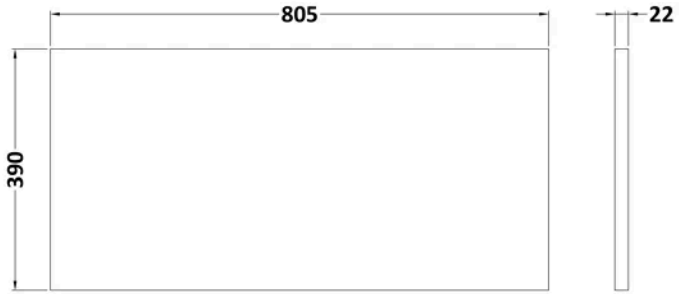

Product Dimensions

Product	22 x 805 x 390mm (H x W x D)
Packaged	25 x 810 x 455mm (H x W x D)
Nett Weight	2.75 kg
Packaged Weight	2.75 kg

Packaging Details

Box Qty	1

Product Details

Country of Origin	United Kingdom
Product Material	Mfc Laminated
Colour/Finish	Carrera Marble
Style	Contemporary

© ROXOR Group

Sales Code: MWT180 **Barcode:** 5056211899761 **Brand:** nuie **Description:** 800mm MDF Matt Worktop



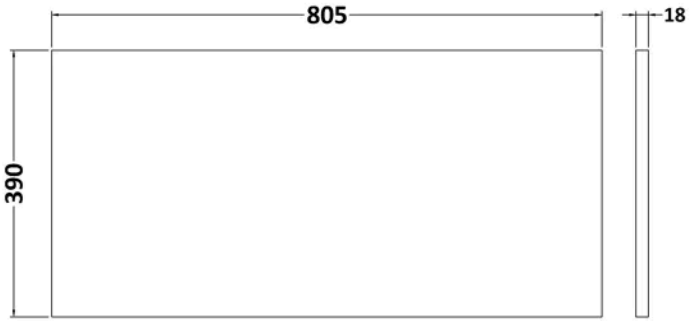

Product Dimensions

Product	18 x 805 x 390mm (H x W x D)
Packaged	25 x 625 x 410mm (H x W x D)
Nett Weight	3 kg
Packaged Weight	3.5 kg

Packaging Details

Box Qty	1

Product Details

Country of Origin	China
Product Material	Mdf Painted Matt
Colour/Finish	Satin White
Style	Contemporary

© ROXOR Group