Sales Code: DIRWH60GR **Barcode:** 5056474592317 **Brand:** Arley Pro **Description:** Arley Pro Direction Gloss Grey 600mm Arley 2 Door Wall Hung Vanity Unit & Basin



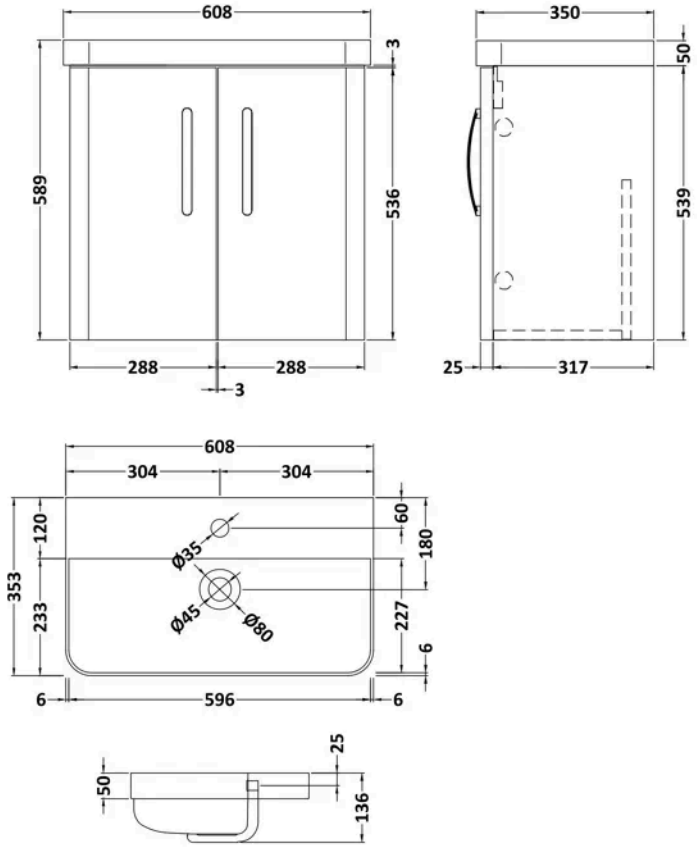

Product Dimensions

Product	589 x 608 x 350mm (H x W x D)
Packaged	560 x 600 x 340mm (H x W x D)
Nett Weight	28.5 kg
Packaged Weight	28.5 kg

Packaging Details

Box Qty	2

Product Details

Country of Origin	China
Product Material	Mfc Painted Gloss
Colour/Finish	Gloss Grey
Mount Type	Wall Hung
Style	Contemporary
Handle Type	Strap
Construction Method	Cam & Wood Dowel
Construction Type	Rigid
Fascia Finish	Mdf Painted Gloss
Handles Included	Yes
Inner Bowl Height	86 mm
Material Thickness	16 mm
No. Doors	2
No. Of Tapholes	1
No. Shelves	1
Number Of Bowls	1
Number Of Shelves	1
Overflow Included	Yes
Tap Included	No
Waste Shroud	No

© ROXOR Group

Sales Code: 237DIR600BSN **Barcode:** 5056474592027 **Brand:** Arley Pro **Description:** Arley Direction 600mm 1 Tap Hole Ceramic Thin Edge Basin



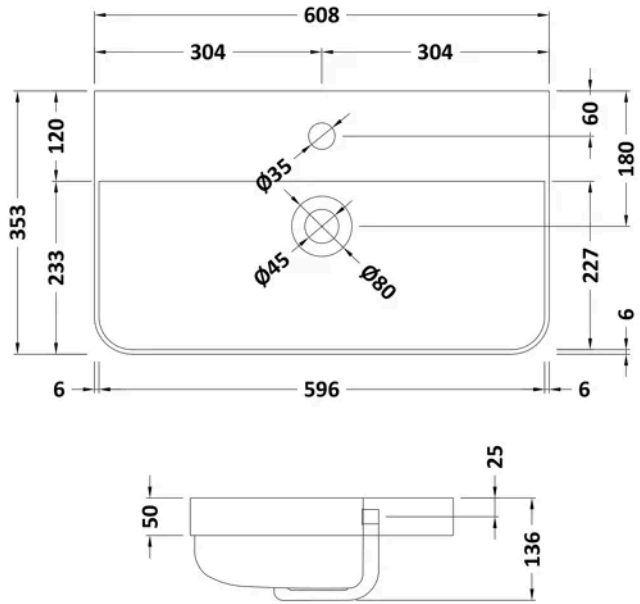

Product Dimensions

Product	135 x 605 x 355mm (H x W x D)
Packaged	415 x 640 x 210mm (H x W x D)
Nett Weight	10 kg
Packaged Weight	10.5 kg

Packaging Details

Box Qty	1

Product Details

Country of Origin	China
Product Material	Vitreous China
Colour/Finish	White
Ce Certified	Yes
Inner Bowl Height	86 mm
No. Of Tapholes	1
Number Of Bowls	1

© ROXOR Group

Sales Code: 237DIRWH600GR **Barcode:** 5056474592065 **Brand:** Arley Pro **Description:** Arley Direction 600mm Gloss Grey 2 Door Wall Hung Basin Unit With Basin



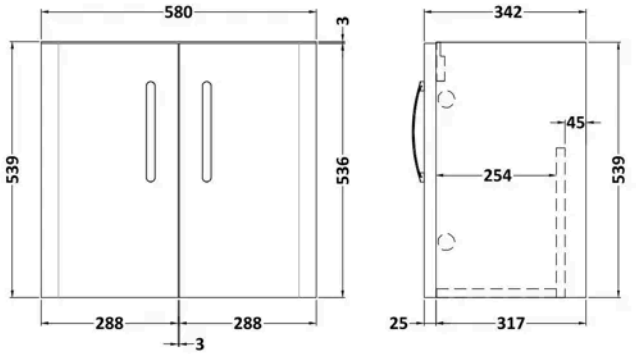

Product Dimensions

Product	540 x 580 x 317mm (H x W x D)
Packaged	560 x 600 x 340mm (H x W x D)
Nett Weight	18 kg
Packaged Weight	18 kg

Packaging Details

Box Qty	1

Product Details

Country of Origin	United Kingdom
Product Material	Mdf Painted Matt
Colour/Finish	Gloss Grey
Mount Type	Wall Hung
Style	Contemporary
Handle Type	Strap
Construction Method	Cam & Wood Dowel
Construction Type	Rigid
Fascia Finish	Mdf Painted Matt
Handles Included	Yes
No. Doors	2
No. Shelves	1
Number Of Shelves	1

© ROXOR Group