Sales Code: DIRFL50AB

Barcode: 5056474592218

Brand: Arley Pro

Description: Arley Pro Direction Satin Blue 500mm Arley 2 Door Floor Standing Vanity Unit With Basin



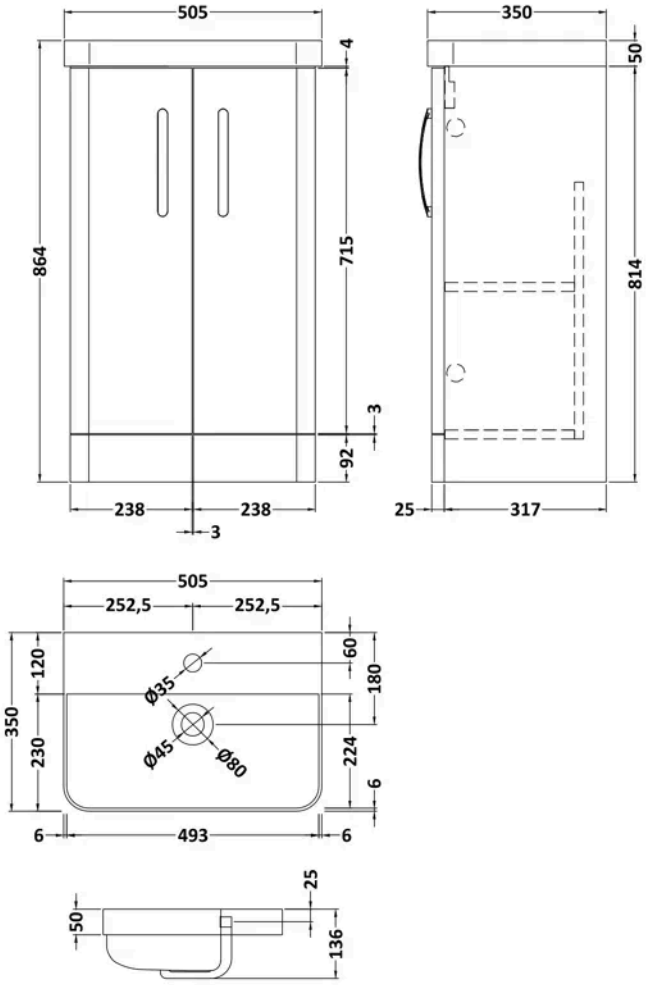

Product Dimensions

Product	864 x 505 x 350mm (H x W x D)
Packaged	835 x 500 x 340mm (H x W x D)
Nett Weight	28.5 kg
Packaged Weight	28.5 kg

Packaging Details

Box Qty	2

Product Details

Country of Origin	China
Product Material	Mfc Painted Matt
Colour/Finish	Satin Blue
Mount Type	Floor
Style	Contemporary
Handle Type	Strap
Construction Method	Cam & Wood Dowel
Construction Type	Rigid
Fascia Finish	Mfc Smooth Matt
Handles Included	Yes
Inner Bowl Height	86 mm
Material Thickness	16 mm
No. Doors	2
No. Of Tapholes	1
No. Shelves	1
Number Of Bowls	1
Number Of Shelves	1
Overflow Included	Yes
Tap Included	No
Waste Shroud	No

© ROXOR Group

Sales Code: 237DIR500BSN **Barcode:** 5056474591952 **Brand:** Arley Pro **Description:** Arley Direction 500mm 1 Tap Hole Ceramic Thin Edge Basin



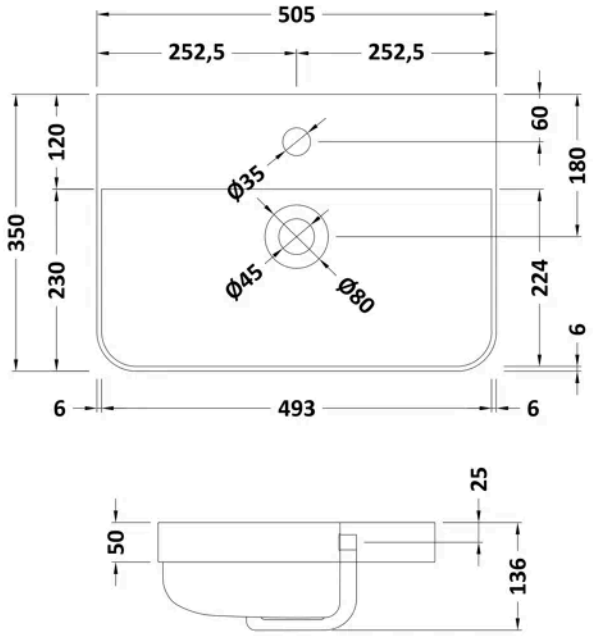

Product Dimensions

Product	135 x 505 x 355mm (H x W x D)
Packaged	415 x 540 x 210mm (H x W x D)
Nett Weight	10 kg
Packaged Weight	10.5 kg

Packaging Details

Box Qty	1

Product Details

Country of Origin	China
Product Material	Vitreous China
Colour/Finish	White
Ce Certified	Yes
Inner Bowl Height	86 mm
No. Of Tapholes	1
Number Of Bowls	1

© ROXOR Group

Sales Code: 237DIRFL500AB **Barcode:** 5056474591945 **Brand:** Arley Pro **Description:** Arley Pro 500mm Azzure Blue 2 Door Floor Standing Vanity Unit



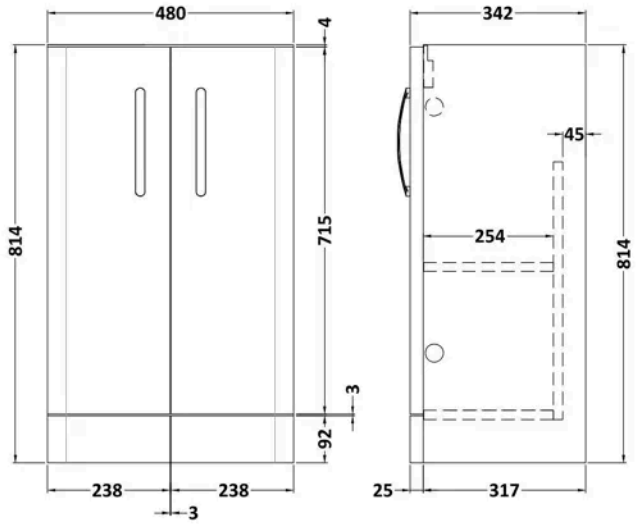

Product Dimensions

Product	814 x 480 x 317mm (H x W x D)
Packaged	835 x 500 x 340mm (H x W x D)
Nett Weight	18 kg
Packaged Weight	18 kg

Packaging Details

Box Qty	1

Product Details

Country of Origin	United Kingdom
Product Material	Mdf Painted Matt
Colour/Finish	Azzure Blue
Mount Type	Floor
Style	Contemporary
Handle Type	Strap
Construction Method	Cam & Wood Dowel
Construction Type	Rigid
Fascia Finish	Mdf Painted Matt
Handles Included	Yes
No. Doors	2
No. Shelves	1
Number Of Shelves	1

© ROXOR Group