Sales Code: DIRFL40WH

Barcode: 5056474592171

Brand: Arley Pro

Description: Arley Pro Direction Gloss White 400mm Arley 1 Door Floor Standing Vanity Unit With Basin



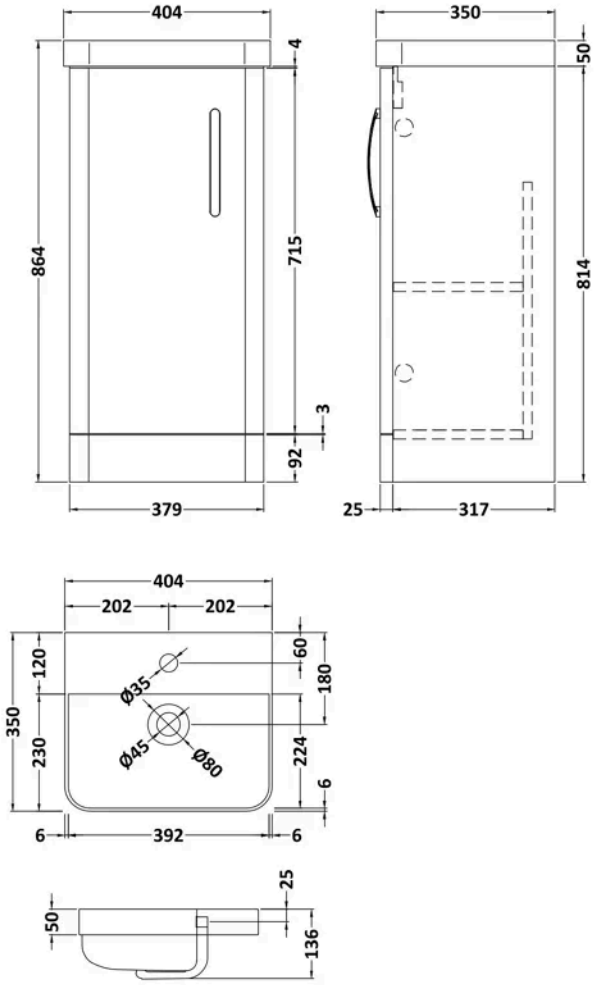

Product Dimensions

Product	864 x 404 x 350mm (H x W x D)
Packaged	835 x 400 x 340mm (H x W x D)
Nett Weight	26 kg
Packaged Weight	26 kg

Packaging Details

Box Qty	2

Product Details

Country of Origin	China
Product Material	Mfc Painted Gloss
Colour/Finish	Gloss White
Mount Type	Floor
Style	Contemporary
Handle Type	Strap
Construction Method	Cam & Wood Dowel
Construction Type	Rigid
Fascia Finish	Mdf Painted Gloss
Handles Included	Yes
Inner Bowl Height	86 mm
Material Thickness	16 mm
No. Doors	1
No. Of Tapholes	1
No. Shelves	1
Number Of Bowls	1
Number Of Shelves	1
Overflow Included	Yes
Tap Included	No
Waste Shroud	No

© ROXOR Group

Sales Code: 237DIR400BSN **Barcode:** 5056474591884 **Brand:** Arley Pro **Description:** Direction 400mm Basin 1TH



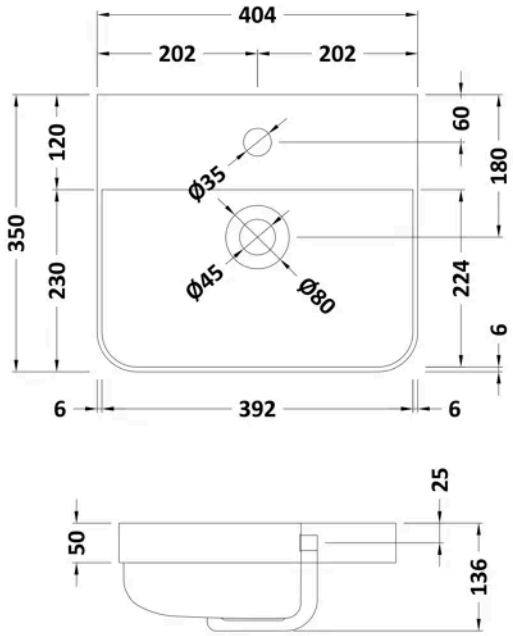

Product Dimensions

Product	135 x 405 x 355mm (H x W x D)
Packaged	415 x 440 x 210mm (H x W x D)
Nett Weight	9.5 kg
Packaged Weight	10 kg

Packaging Details

Box Qty	1

Product Details

Country of Origin	China
Product Material	Vitreous China
Colour/Finish	White
Ce Certified	Yes
Inner Bowl Height	86 mm
No. Of Tapholes	1
Number Of Bowls	1

© ROXOR Group

Sales Code: 237DIRFL400WH **Barcode:** 5056474591907 **Brand:** Arley Pro **Description:** Arley Pro 400mm Gloss White Floor Standing Vanity Unit



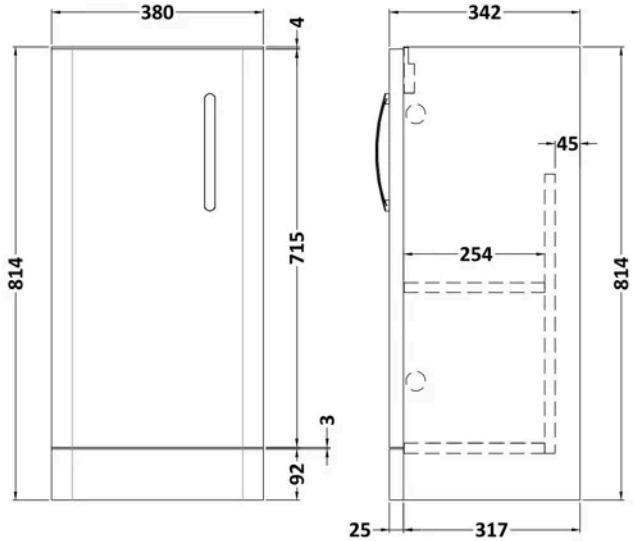

Product Dimensions

Product	814 x 380 x 317mm (H x W x D)
Packaged	835 x 400 x 340mm (H x W x D)
Nett Weight	16 kg
Packaged Weight	16 kg

Product Details

Country of Origin	United Kingdom
Product Material	Mdf Painted Matt
Colour/Finish	Gloss White
Mount Type	Floor
Style	Contemporary
Handle Type	Strap
Construction Method	Cam & Wood Dowel
Construction Type	Rigid
Fascia Finish	Mdf Painted Matt
Handles Included	Yes
No. Doors	1
No. Shelves	1
Number Of Shelves	1

© ROXOR Group