**Sales Code:** DIRFL40GR

**Barcode:** 5056474592164

**Brand:** Arley Pro

**Description:** Arley Pro Direction Gloss Grey 400mm Arley 1 Door Floor Standing Vanity Unit With Basin



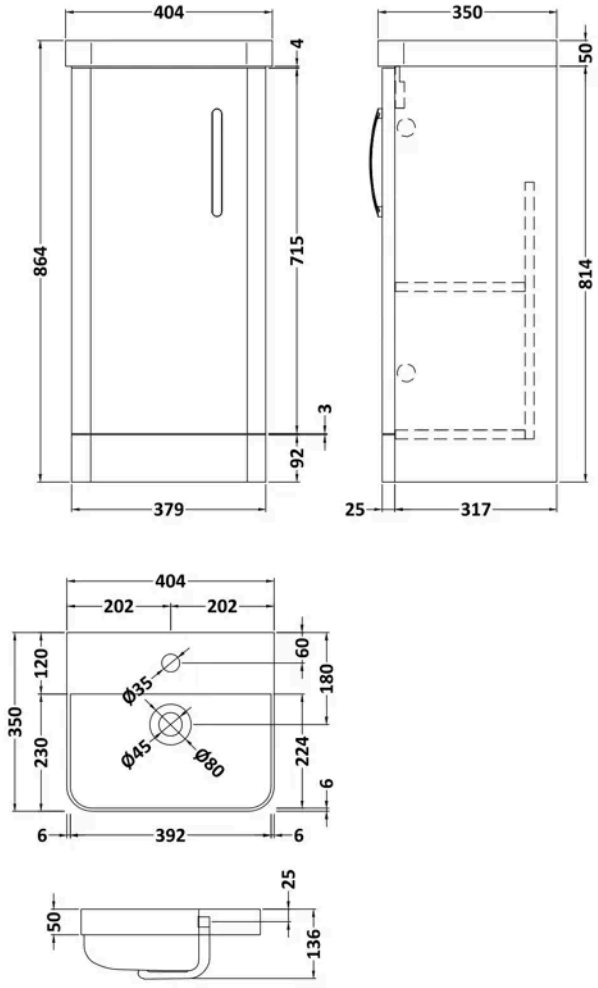


## Product Dimensions

| | |
|---|---|
| Product | 864 x 404 x 350mm (H x W x D) |
| Packaged | 835 x 400 x 340mm (H x W x D) |
| Nett Weight | 26 kg |
| Packaged Weight | 26 kg |

## Packaging Details

| | |
|---|---|
| Box Qty | 2 |

## Product Details

| | |
|---|---|
| Country of Origin | China |
| Product Material | Mfc Painted Gloss |
| Colour/Finish | Gloss Grey |
| Mount Type | Floor |
| Style | Contemporary |
| Handle Type | Strap |
| Construction Method | Cam & Wood Dowel |
| Construction Type | Rigid |
| Fascia Finish | Mdf Painted Gloss |
| Handles Included | Yes |
| Inner Bowl Height | 86 mm |
| Material Thickness | 16 mm |
| No. Doors | 1 |
| No. Of Tapholes | 1 |
| No. Shelves | 1 |
| Number Of Bowls | 1 |
| Number Of Shelves | 1 |
| Overflow Included | Yes |
| Tap Included | No |
| Waste Shroud | No |

© ROXOR Group

**Sales Code:** 237DIR400BSN **Barcode:** 5056474591884 **Brand:** Arley Pro **Description:** Direction 400mm Basin 1TH



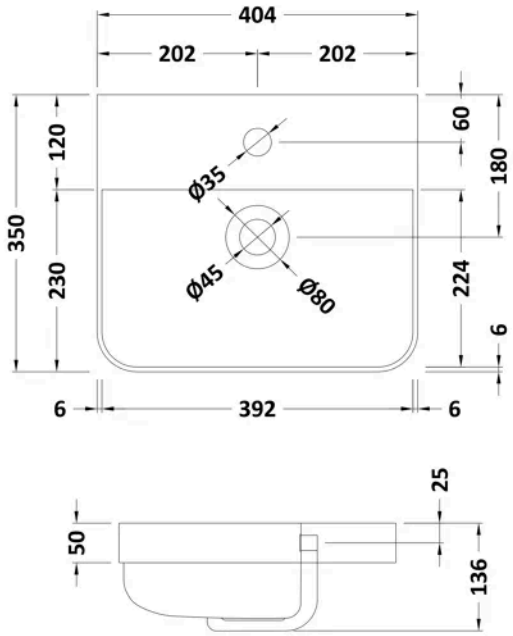


## Product Dimensions

| | |
|---|---|
| Product | 135 x 405 x 355mm (H x W x D) |
| Packaged | 415 x 440 x 210mm (H x W x D) |
| Nett Weight | 9.5 kg |
| Packaged Weight | 10 kg |

## Packaging Details

| | |
|---|---|
| Box Qty | 1 |

## Product Details

| | |
|---|---|
| Country of Origin | China |
| Product Material | Vitreous China |
| Colour/Finish | White |
| Ce Certified | Yes |
| Inner Bowl Height | 86 mm |
| No. Of Tapholes | 1 |
| Number Of Bowls | 1 |

© ROXOR Group

**Sales Code:** 237DIRFL400GR **Barcode:** 5056474591891 **Brand:** Arley Pro **Description:** Arley Pro 400mm Gloss Grey Floor Standing Vanity Unit



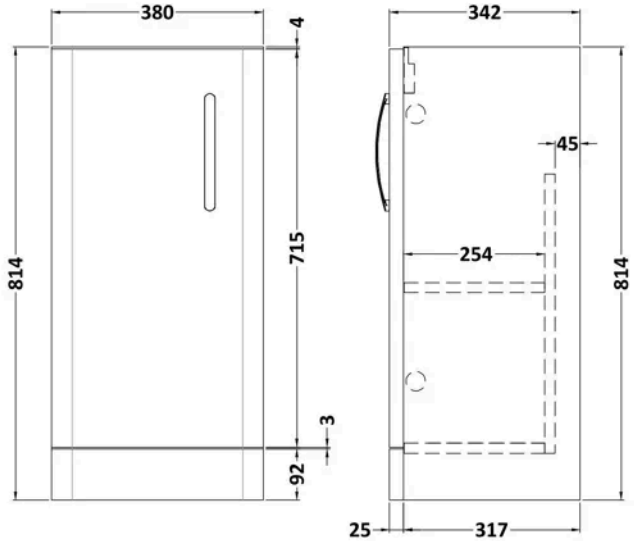


## Product Dimensions

| | |
|---|---|
| Product | 814 x 380 x 317mm (H x W x D) |
| Packaged | 835 x 400 x 340mm (H x W x D) |
| Nett Weight | 16 kg |
| Packaged Weight | 16 kg |

## Packaging Details

| | |
|---|---|
| Box Qty | 1 |

## Product Details

| | |
|---|---|
| Country of Origin | United Kingdom |
| Product Material | Mdf Painted Matt |
| Colour/Finish | Gloss Grey |
| Mount Type | Floor |
| Style | Contemporary |
| Handle Type | Strap |
| Construction Method | Cam & Wood Dowel |
| Construction Type | Rigid |
| Fascia Finish | Mdf Painted Matt |
| Handles Included | Yes |
| No. Doors | 1 |
| No. Shelves | 1 |
| Number Of Shelves | 1 |

© ROXOR Group