Sales Code: DFF896D

Barcode: 5056462678665

Brand: Hudson Reed

Description: Hudson Reed Fluted Satin Green 800mm 1 Drawer Wall Hung Vanity Unit With Thin Edge Basin



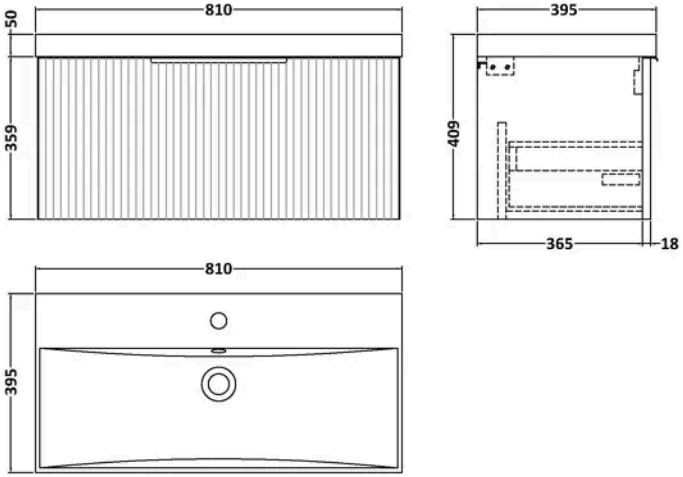

Product Dimensions

Product	409 x 810 x 395mm (H x W x D)
Nett Weight	31.5 kg
Packaged Weight	32 kg

Packaging Details

Box Qty	2

Product Details

Country of Origin	China
Product Material	Mfc Painted Gloss
Colour/Finish	Satin Green
Mount Type	Wall Hung
Style	Contemporary
Handle Type	Finger Pull
Construction Method	Cam & Wood Dowel
Construction Type	Rigid
Drawer Type	80mm High Metal S/C Inc Gallery
Fascia Finish	Mdf Painted Gloss
Fsc Certified	Yes
Handles Included	Yes
Inner Bowl Height	125 mm
Leg Set Included	No
Material Thickness	16 mm
No. Drawers	1
No. Of Tapholes	1
Number Of Bowls	1
Overflow Included	Yes
Tap Included	No
Waste Included	No
Waste Shroud	Yes

© ROXOR Group

Sales Code: FLU896 **Barcode:** 5056462654775 **Brand:** Hudson Reed **Description:** Hudson Reed Fluted 800mm Fluted Single Drawer Vanity Unit

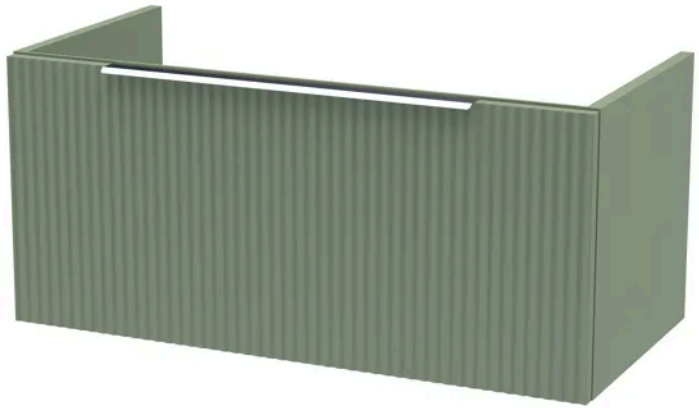

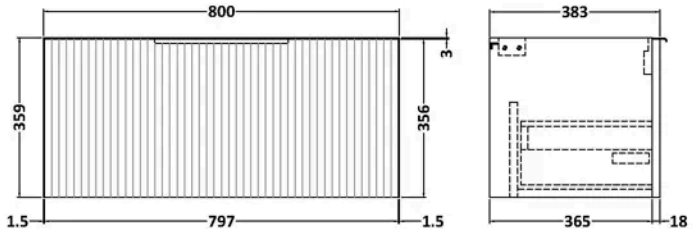

Product Dimensions

Product	359 x 800 x 383mm (H x W x D)
Packaged	380 x 820 x 405mm (H x W x D)
Nett Weight	17.5 kg
Packaged Weight	18 kg

Packaging Details

Box Qty	1

Product Details

Country of Origin	China
Product Material	Mdf Painted Matt
Colour/Finish	Satin Green
Mount Type	Wall Hung
Style	Contemporary
Construction Method	Cam & Wood Dowel
Construction Type	Rigid
Fascia Finish	Mdf Painted Matt
Handles Included	Yes
Material Thickness	18 mm
No. Drawers	1

© ROXOR Group

Sales Code: NVM035 **Barcode:** 5056211853435 **Brand:** nuie **Description:** 1 Tap Hole 800mm Thin Edge Ceramic Basin



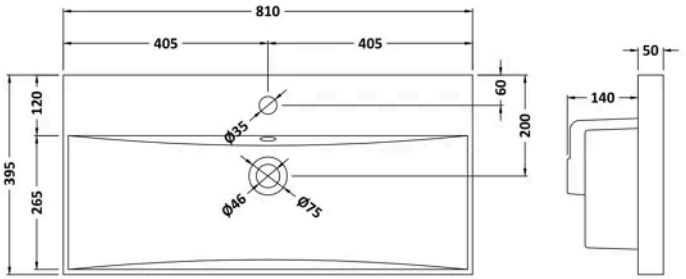

Product Dimensions

Product	190 x 810 x 395mm (H x W x D)
Packaged	190 x 830 x 415mm (H x W x D)
Nett Weight	14.5 kg
Packaged Weight	15 kg

Packaging Details

Box Qty	1

Product Details

Country of Origin	China
Product Material	Vitreous China
Colour/Finish	White
Style	Contemporary
Ce Certified	Yes
Inner Bowl Height	125 mm
No. Of Tapholes	1
Number Of Bowls	1
Overflow Included	Yes
Tap Included	No
Waste Included	No

© ROXOR Group