Sales Code: DFF894W2

Barcode: 5056462679204

Brand: Hudson Reed

Description: Hudson Reed Fluted 1200mm Satin Green 2 Drawer Wall Hung Vanity With Co-ordinating Worktop

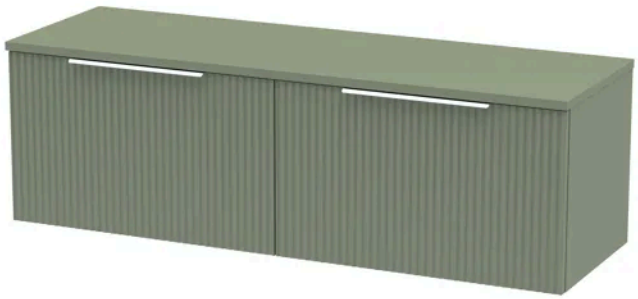

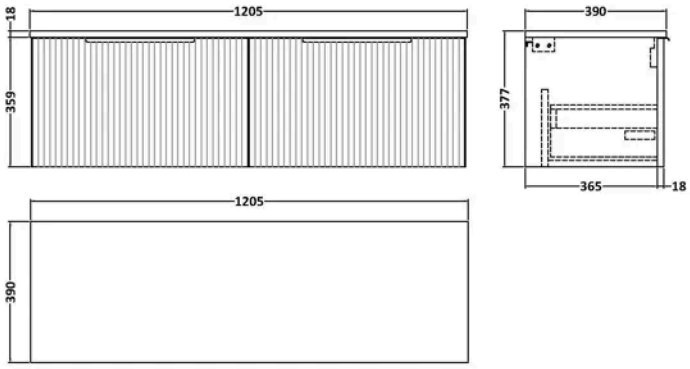

Product Dimensions

Product	377 x 1205 x 390mm (H x W x D)
Nett Weight	30.5 kg
Packaged Weight	31 kg

Packaging Details

Box Qty	3

Product Details

Country of Origin	China
Product Material	Mfc Painted Gloss
Colour/Finish	Satin Green
Mount Type	Wall Hung
Style	Contemporary
Handle Type	Finger Pull
Construction Method	Cam & Wood Dowel
Construction Type	Rigid
Drawer Type	80mm High Metal S/C Inc Gallery
Fascia Finish	Mdf Painted Gloss
Fsc Certified	Yes
Handles Included	Yes
Material Thickness	16 mm
No. Drawers	1
Waste Shroud	Yes

© ROXOR Group

Sales Code: FLU894 **Barcode:** 5056462654690 **Brand:** Hudson Reed **Description:** Hudson Reed Fluted 600mm Fluted Single Drawer Vanity Unit

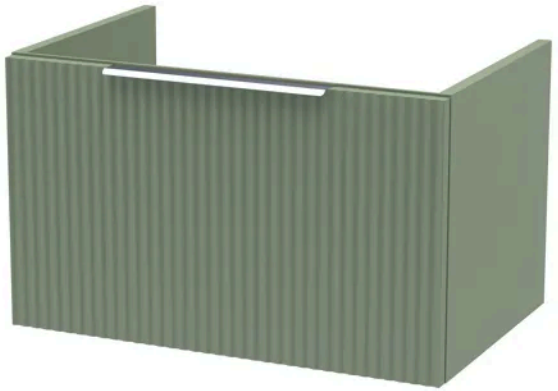

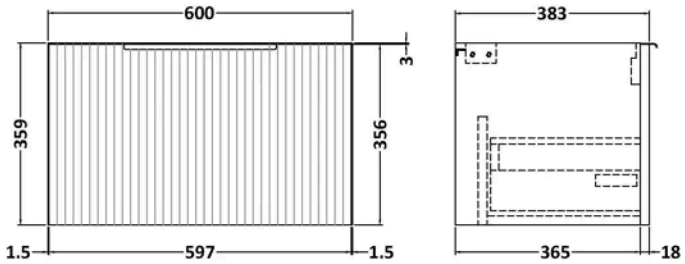

Product Dimensions

Product	359 x 600 x 383mm (H x W x D)
Packaged	380 x 620 x 405mm (H x W x D)
Nett Weight	13 kg
Packaged Weight	13.5 kg

Packaging Details

Box Qty	1

Product Details

Country of Origin	China
Product Material	Mdf Painted Matt
Colour/Finish	Satin Green
Mount Type	Wall Hung
Style	Contemporary
Construction Method	Cam & Wood Dowel
Construction Type	Rigid
Fascia Finish	Mdf Painted Matt
Handles Included	Yes
Material Thickness	18 mm
No. Drawers	1

© ROXOR Group

Sales Code: MWT820 **Barcode:** 5056462654997 **Brand:** nuie **Description:** 1200mm Satin Green MDF Matt Worktop



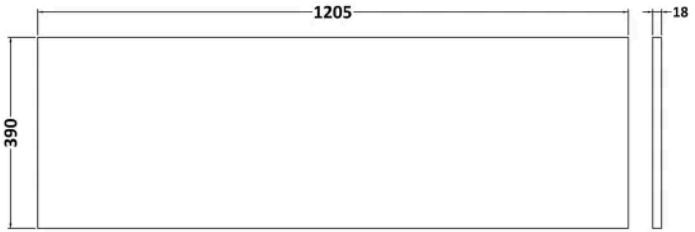

Product Dimensions

Product	18 x 1205 x 390mm (H x W x D)
Packaged	25 x 1225 x 410mm (H x W x D)
Nett Weight	5 kg
Packaged Weight	5 kg

Packaging Details

Box Qty	1

Product Details

Country of Origin	China
Product Material	Mdf Painted Matt
Colour/Finish	Satin Green
Style	Contemporary

© ROXOR Group