Sales Code: DFF894C

Barcode: 5056462679198

Brand: Hudson Reed

Description: Hudson Reed Fluted Satin Green 1200mm 2 Drawer Wall Hung Vanity Unit With 2 Tap Hole Polymarble basin



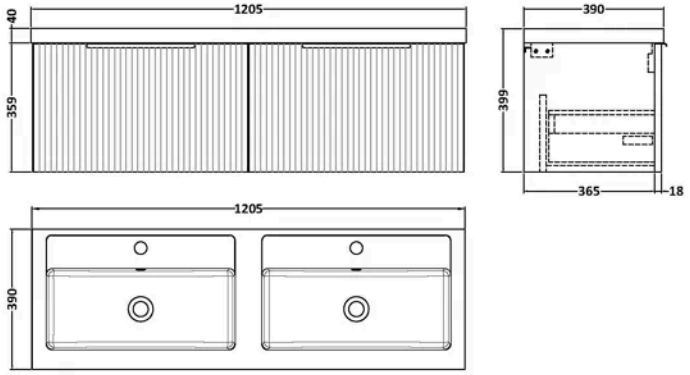

Product Dimensions

Product	399 x 1205 x 383mm (H x W x D)
Nett Weight	43.62 kg
Packaged Weight	44.12 kg

Packaging Details

Box Qty	3

Product Details

Country of Origin	China
Product Material	Mfc Painted Gloss
Colour/Finish	Satin Green
Mount Type	Wall Hung
Style	Contemporary
Handle Type	Finger Pull
Construction Method	Cam & Wood Dowel
Construction Type	Rigid
Drawer Type	80mm High Metal S/C Inc Gallery
Fascia Finish	Mdf Painted Gloss
Fsc Certified	Yes
Handles Included	Yes
Inner Bowl Height	103 mm
Leg Set Included	No
Material Thickness	16 mm
No. Drawers	2
No. Of Tapholes	2
Number Of Bowls	2
Overflow Included	Yes
Tap Included	No
Waste Included	No
Waste Shroud	Yes

© ROXOR Group

Sales Code: FLU894 **Barcode:** 5056462654690 **Brand:** Hudson Reed **Description:** Hudson Reed Fluted 600mm Fluted Single Drawer Vanity Unit

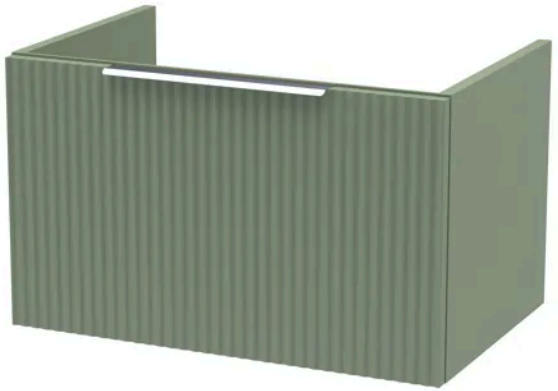

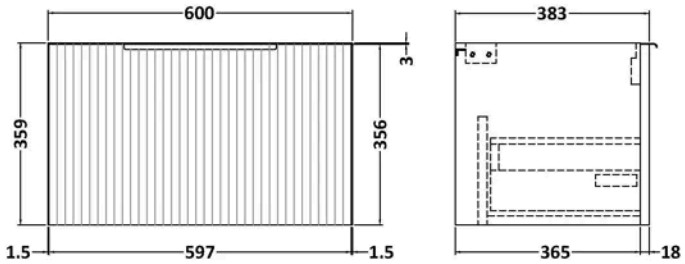

Product Dimensions

Product	359 x 600 x 383mm (H x W x D)
Packaged	380 x 620 x 405mm (H x W x D)
Nett Weight	13 kg
Packaged Weight	13.5 kg

Packaging Details

Box Qty	1

Product Details

Country of Origin	China
Product Material	Mdf Painted Matt
Colour/Finish	Satin Green
Mount Type	Wall Hung
Style	Contemporary
Construction Method	Cam & Wood Dowel
Construction Type	Rigid
Fascia Finish	Mdf Painted Matt
Handles Included	Yes
Material Thickness	18 mm
No. Drawers	1

© ROXOR Group

Sales Code: PMB424 **Barcode:** 5056211815136 **Brand:** nuie **Description:** 1200mm 2 Tap Hole Twin Polymarble Basin



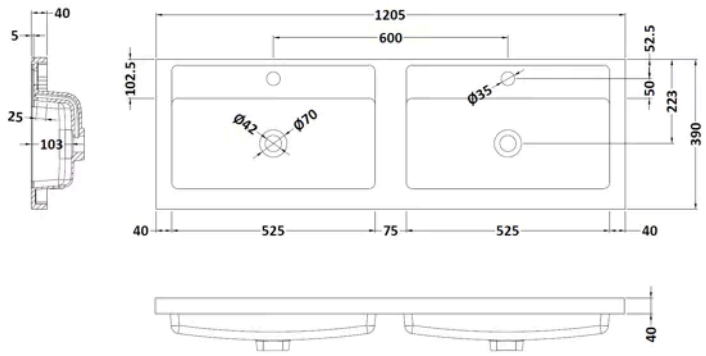

Product Dimensions

Product	100 x 1205 x 390mm (H x W x D)
Packaged	100 x 1205 x 400mm (H x W x D)
Nett Weight	18.12 kg
Packaged Weight	18.12 kg

Packaging Details

Box Qty	1

Product Details

Country of Origin	China
Product Material	Polymarble
Colour/Finish	White
Style	Contemporary
Ce Certified	Yes
Inner Bowl Height	103 mm
No. Of Tapholes	2
Number Of Bowls	1
Overflow Included	Yes
Tap Included	No
Waste Included	No

© ROXOR Group