Sales Code: DFF396B

Barcode: 5056462678511

Brand: Hudson Reed

Description: Hudson Reed Fluted Satin Blue 800mm 1 Drawer Wall Hung Vanity Unit With Minimalist Basin



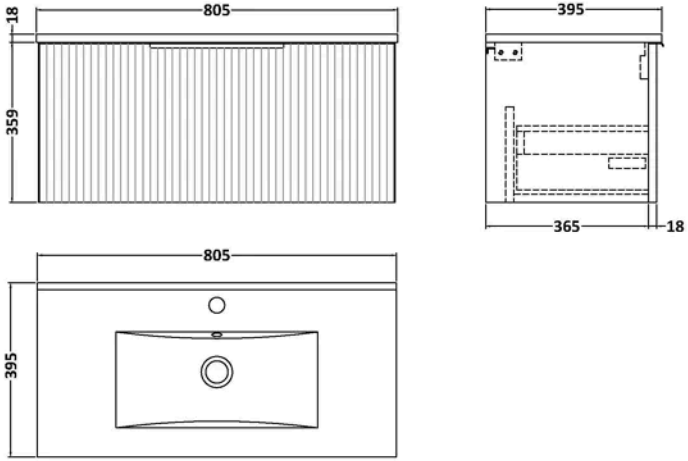

Product Dimensions

Product	377 x 800 x 390mm (H x W x D)
Nett Weight	30.74 kg
Packaged Weight	31.24 kg

Packaging Details

Box Qty	2

Product Details

Country of Origin	China
Product Material	Mfc Painted Gloss
Colour/Finish	Satin Blue
Mount Type	Wall Hung
Style	Contemporary
Handle Type	Finger Pull
Construction Method	Cam & Wood Dowel
Construction Type	Rigid
Drawer Type	80mm High Metal S/C Inc Gallery
Fascia Finish	Mdf Painted Gloss
Fsc Certified	Yes
Handles Included	Yes
Inner Bowl Height	125 mm
Leg Set Included	No
Material Thickness	16 mm
No. Drawers	1
No. Of Tapholes	1
Number Of Bowls	1
Overflow Included	Yes
Tap Included	No
Waste Included	No
Waste Shroud	Yes

© ROXOR Group

Sales Code: FLU396 **Barcode:** 5056462654768 **Brand:** Hudson Reed **Description:** Hudson Reed Fluted 800mm Fluted Single Drawer Vanity Unit

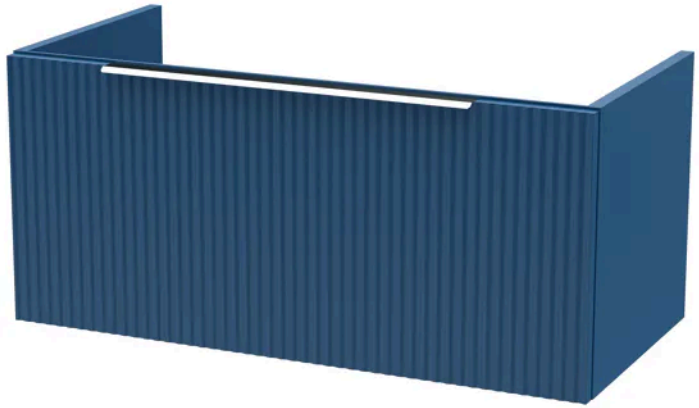

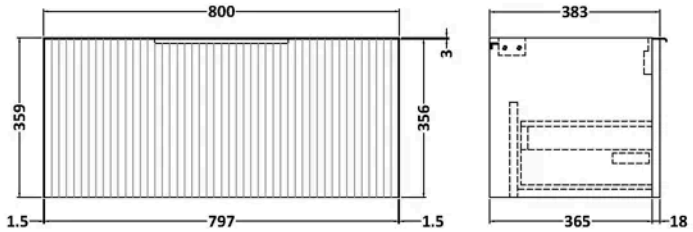

Product Dimensions

Product	359 x 800 x 383mm (H x W x D)
Packaged	380 x 820 x 405mm (H x W x D)
Nett Weight	17.5 kg
Packaged Weight	18 kg

Packaging Details

Box Qty	1

Product Details

Country of Origin	China
Product Material	Mdf Painted Matt
Colour/Finish	Azzure Blue
Mount Type	Wall Hung
Style	Contemporary
Construction Method	Cam & Wood Dowel
Construction Type	Rigid
Fascia Finish	Mdf Painted Matt
Handles Included	Yes
Material Thickness	18 mm
No. Drawers	1

© ROXOR Group

Sales Code: NVM005 **Barcode:** 5055146194675 **Brand:** nuie **Description:** 1 Tap Hole 800mm Minimalist Ceramic Basin



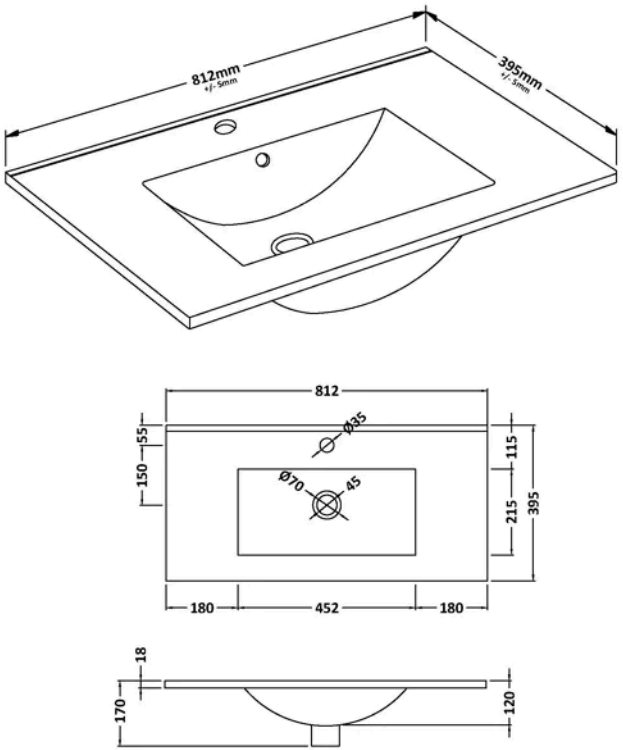

Product Dimensions

Product	170 x 812 x 395mm (H x W x D)
Packaged	400 x 820 x 200mm (H x W x D)
Nett Weight	13.74 kg
Packaged Weight	15 kg

Packaging Details

Box Qty	1

Product Details

Country of Origin	China
Product Material	Vitreous China
Colour/Finish	White
Style	Contemporary
Ce Certified	Yes
Inner Bowl Height	125 mm
No. Of Tapholes	1
Number Of Bowls	1
Overflow Included	Yes
Tap Included	No
Waste Included	No

© ROXOR Group