**Sales Code:** DFF396A

**Barcode:** 5056462678504

**Brand:** Hudson Reed

**Description:** Hudson Reed Fluted Satin Blue 800mm 1 Drawer Wall Hung Vanity Unit With Mid-Edge Basin



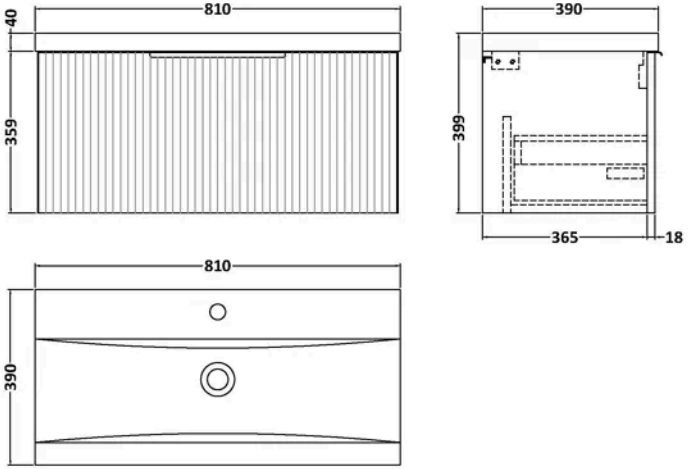


## Product Dimensions

| | |
|---|---|
| Product | 399 x 810 x 390mm (H x W x D) |
| Nett Weight | 30.7 kg |
| Packaged Weight | 31.2 kg |

## Packaging Details

| | |
|---|---|
| Box Qty | 2 |

## Product Details

| | |
|---|---|
| Country of Origin | China |
| Product Material | Mfc Painted Gloss |
| Colour/Finish | Satin Blue |
| Mount Type | Wall Hung |
| Style | Contemporary |
| Handle Type | Finger Pull |
| Construction Method | Cam & Wood Dowel |
| Construction Type | Rigid |
| Drawer Type | 80mm High Metal S/C Inc Gallery |
| Fascia Finish | Mdf Painted Gloss |
| Fsc Certified | Yes |
| Handles Included | Yes |
| Inner Bowl Height | 125 mm |
| Leg Set Included | No |
| Material Thickness | 16 mm |
| No. Drawers | 1 |
| No. Of Tapholes | 1 |
| Number Of Bowls | 1 |
| Overflow Included | Yes |
| Tap Included | No |
| Waste Included | No |
| Waste Shroud | Yes |

© ROXOR Group

**Sales Code:** FLU396 **Barcode:** 5056462654768 **Brand:** Hudson Reed **Description:** Hudson Reed Fluted 800mm Fluted Single Drawer Vanity Unit

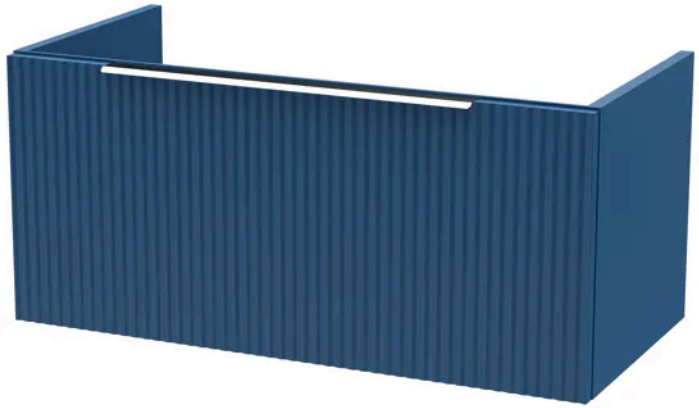

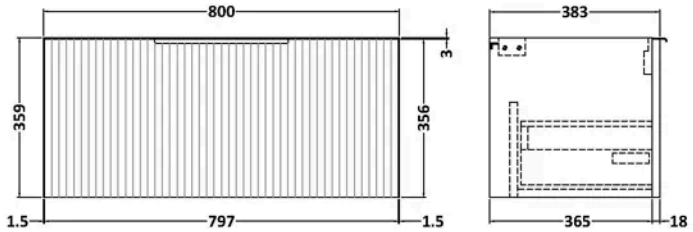


## Product Dimensions

| | |
|---|---|
| Product | 359 x 800 x 383mm (H x W x D) |
| Packaged | 380 x 820 x 405mm (H x W x D) |
| Nett Weight | 17.5 kg |
| Packaged Weight | 18 kg |

## Packaging Details

| | |
|---|---|
| Box Qty | 1 |

## Product Details

| | |
|---|---|
| Country of Origin | China |
| Product Material | Mdf Painted Matt |
| Colour/Finish | Azzure Blue |
| Mount Type | Wall Hung |
| Style | Contemporary |
| Construction Method | Cam & Wood Dowel |
| Construction Type | Rigid |
| Fascia Finish | Mdf Painted Matt |
| Handles Included | Yes |
| Material Thickness | 18 mm |
| No. Drawers | 1 |

© ROXOR Group

**Sales Code:** NVM015 **Barcode:** 5055369043422 **Brand:** nuie **Description:** 1 Tap Hole 800mm Mid-Edge Ceramic Basin



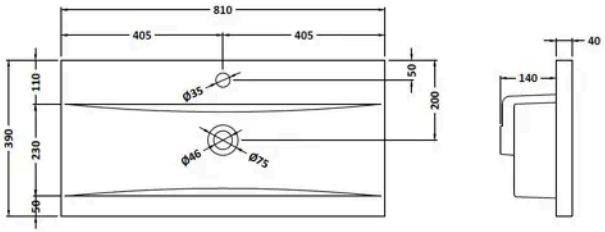


## Product Dimensions

| | |
|---|---|
| Product | 180 x 810 x 390mm (H x W x D) |
| Packaged | 195 x 410 x 830mm (H x W x D) |
| Nett Weight | 13.7 kg |
| Packaged Weight | 14.8 kg |

## Packaging Details

| | |
|---|---|
| Box Qty | 1 |

## Product Details

| | |
|---|---|
| Country of Origin | China |
| Product Material | Vitreous China |
| Colour/Finish | White |
| Style | Contemporary |
| Ce Certified | Yes |
| Inner Bowl Height | 125 mm |
| No. Of Tapholes | 1 |
| Number Of Bowls | 1 |
| Overflow Included | Yes |
| Tap Included | No |
| Waste Included | No |

© ROXOR Group