**Sales Code:** DFF394D

**Barcode:** 5056462677828

**Brand:** Hudson Reed

**Description:** Hudson Reed Fluted Satin Blue 600mm 1 Drawer Wall Hung Vanity Unit With Thin Edge Basin



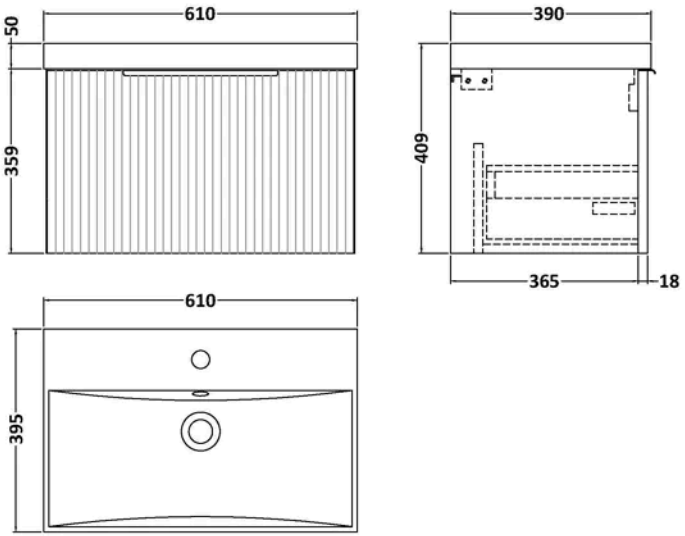


## Product Dimensions

| | |
|---|---|
| Product | 409 x 610 x 395mm (H x W x D) |
| Nett Weight | 23.5 kg |
| Packaged Weight | 24 kg |

## Packaging Details

| | |
|---|---|
| Box Qty | 2 |

## Product Details

| | |
|---|---|
| Country of Origin | China |
| Product Material | Mfc Painted Gloss |
| Colour/Finish | Satin Blue |
| Mount Type | Wall Hung |
| Style | Contemporary |
| Handle Type | Finger Pull |
| Construction Method | Cam & Wood Dowel |
| Construction Type | Rigid |
| Drawer Type | 80mm High Metal S/C Inc Gallery |
| Fascia Finish | Mdf Painted Gloss |
| Fsc Certified | Yes |
| Handles Included | Yes |
| Inner Bowl Height | 125 mm |
| Leg Set Included | No |
| Material Thickness | 16 mm |
| No. Drawers | 1 |
| No. Of Tapholes | 1 |
| Number Of Bowls | 1 |
| Overflow Included | Yes |
| Tap Included | No |
| Waste Included | No |
| Waste Shroud | Yes |

© ROXOR Group

**Sales Code:** FLU394 **Barcode:** 5056462654683 **Brand:** Hudson Reed **Description:** Hudson Reed Fluted 600mm Fluted Single Drawer Vanity Unit



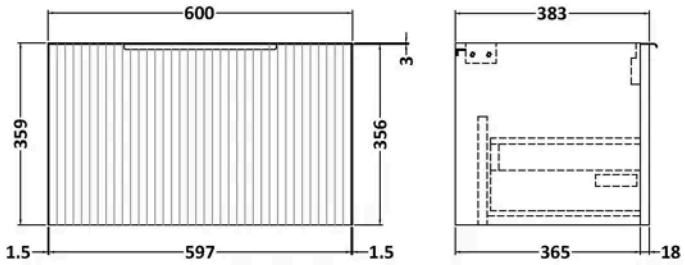


## Product Dimensions

| | |
|---|---|
| Product | 359 x 600 x 383mm (H x W x D) |
| Packaged | 380 x 620 x 405mm (H x W x D) |
| Nett Weight | 13 kg |
| Packaged Weight | 13.5 kg |

## Packaging Details

| | |
|---|---|
| Box Qty | 1 |

## Product Details

| | |
|---|---|
| Country of Origin | China |
| Product Material | Mdf Painted Matt |
| Colour/Finish | Azzure Blue |
| Mount Type | Wall Hung |
| Style | Contemporary |
| Construction Method | Cam & Wood Dowel |
| Construction Type | Rigid |
| Fascia Finish | Mdf Painted Matt |
| Handles Included | Yes |
| Material Thickness | 18 mm |
| No. Drawers | 1 |

© ROXOR Group

**Sales Code:** NVM033 **Barcode:** 5056211853428 **Brand:** nuie **Description:** 1 Tap Hole 600mm Thin Edge Ceramic Basin



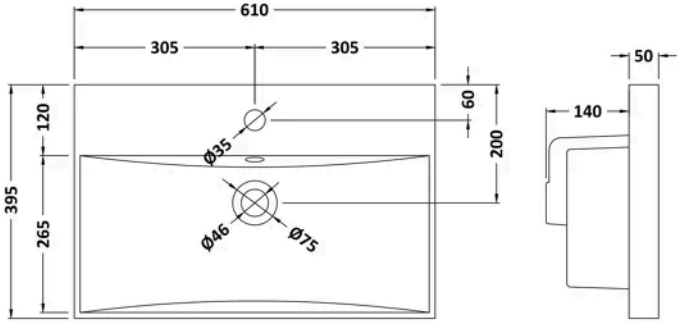


## Product Dimensions

| | |
|---|---|
| Product | 190 x 610 x 395mm (H x W x D) |
| Packaged | 190 x 630 x 415mm (H x W x D) |
| Nett Weight | 11 kg |
| Packaged Weight | 11.5 kg |

## Packaging Details

| | |
|---|---|
| Box Qty | 1 |

## Product Details

| | |
|---|---|
| Country of Origin | China |
| Product Material | Vitreous China |
| Colour/Finish | White |
| Style | Contemporary |
| Ce Certified | Yes |
| Inner Bowl Height | 125 mm |
| No. Of Tapholes | 1 |
| Number Of Bowls | 1 |
| Overflow Included | Yes |
| Tap Included | No |
| Waste Included | No |

© ROXOR Group